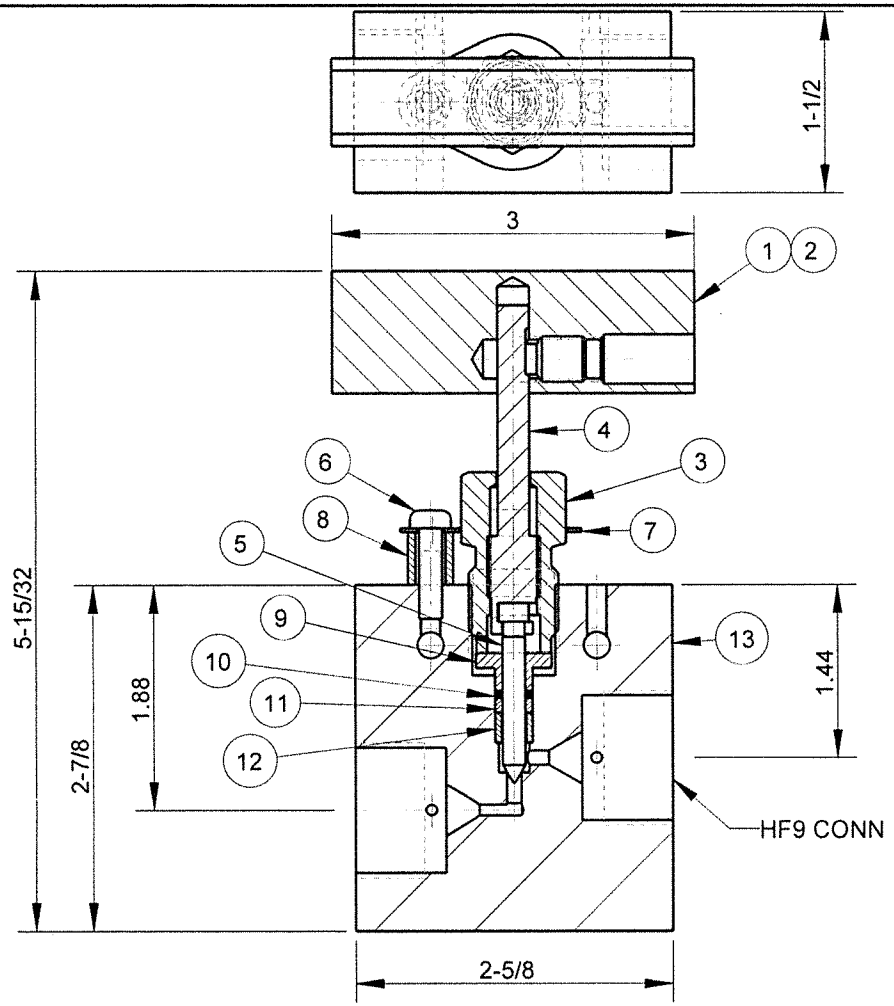

BILL OF MATERIAL				
ITEM	QTY	DESCRIPTION	PART NO.	MATERIAL
1	1	SOC SET SCREW	B01489	STEEL
2	1	HANDLE	212435	ALUMINUM
3	1	PACKING GLAND	213914	316
4	1	UPPER STEM	213909	17-4_PH_H1150
5	1	LOWER STEM	213910	17-4_PH_H900
6	1	10-32 MACHINE SCREW	B00267	304
7	1	LOCKING DEVICE	200657	300_SERIES_SST
8	1	LOCKING DEVICE SPACER	201127	304
9	1	TOP PACKING WASHER	200154	416
10	1	PACKING	B00181	TEFLON
11	1	BOTTOM WASHER	200156	316
12	1	SPACER	200155	316
13	1	VALVE BODY	200251	316
14	2	COLLAR	60-2H9	316
15	2	GLAND	60-2HM9	316

30-11HF9
316SS
30000 PSI

NO.	REVISION	DATE	BY

DISTRIBUTION OR REPRODUCTION OF THIS DOCUMENT IS PROHIBITED WITHOUT WRITTEN PERMISSION FROM HIGH PRESSURE EQUIPMENT COMPANY

HIGH PRESSURE EQUIPMENT COMPANY
ERIE, PENNSYLVANIA USA

VALVE ASSEMBLY

DF | 2015-12-17 | 404817