Linear Actuators

Linear actuators for industrial, mobile, medical, office and domestic applications.

THOMSON®

Linear Motion. ***Optimized.***

www.thomsonlinear.com

Linear Motion. **Optimized.**

Thomson – the Choice for Optimized Motion Solutions

Often the ideal design solution is not about finding the fastest, sturdiest, most accurate or even the least expensive option. Rather, the ideal solution is the optimal balance of performance, life and cost.

The Best Positioned Supplier of Mechanical Motion Technology

Thomson has several advantages that makes us the supplier of choice for motion control technology.

- Thomson own the broadest standard product offering of mechanical motion technologies in the industry.
- Modified versions of standard product or white sheet design solutions are routine for us.
- Choose Thomson and gain access to over 70 years of global application experience in industries including packaging, factory automation, material handling, medical, clean energy, printing, automotive, machine tool, aerospace and defense.
- As part of Danaher Corporation, we are financially strong and unique in our ability to bring together control, drive, motor, power transmission and precision linear motion technologies.

A Name You Can Trust

A wealth of product and application information as well as 3D models, software tools, our distributor locator and global contact information is available at www.thomsonlinear.com. For assistance in Europe, contact us at +44 1271 334 500 or e-mail us at sales.uk@thomsonlinear.com.

Talk to us early in the design process to see how Thomson can help identify the optimal balance of performance, life and cost for your next application. And, call us or any of our 2000+ distribution partners around the world for fast delivery of replacement parts.

The Danaher Business System

The Danaher Business System (DBS) was established to increase the value we bring to customers. It is a mature and successful set of tools we use daily to continually improve manufacturing operations and product development processes. DBS is based on the principles of Kaizen which continuously and aggressively eliminate waste in every aspect of our business. DBS focuses the entire organization on achieving breakthrough results that create competitive advantages in quality, delivery and performance – advantages that are passed on to you. Through these advantages Thomson is able to provide you faster times to market as well as unsurpassed product selection, service, reliability and productivity.

Local Support Around the Globe

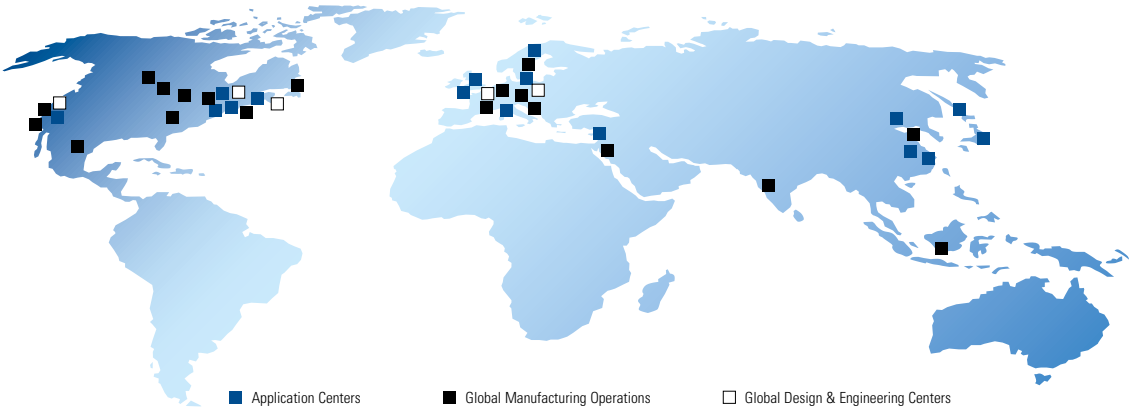

Introduction

Table of Contents

Introduction **3**
Company Introduction 4
Product Introduction 5
The Benefits of Electrification ..... 6 - 7
Actuator Applications 8
Selection Procedure 9

Performance Overview **10**
Standard Rod Actuators ..... 10 - 11
Lifting Columns 12
Rodless Actuators 13
Non-driven and Rotary Actuators 14
Legacy Actuators 15

Rod Actuators **16**
Elektrak® 1 ..... 16 - 17
Electrak® 1SP ..... 18 - 19
Electrak® 050 ..... 20 - 21
Electrak® PPA-DC ..... 22 - 23
Electrak® 10 ..... 24 - 25
Electrak® LA14 ..... 26 - 25
Electrak® 5 ..... 28 - 29
Electrak® LA24 ..... 30 - 31
Electrak® Throttle ..... 32 - 33
Max Jac ..... 34 - 35

Lifting Columns **36**
LC1600 ..... 36 - 37
LC2000 ..... 38 - 39
LC3000 ..... 40 - 41
DMD ..... 42 - 43
DMA ..... 44 - 45

Rodless Actuators **46**
LM80-H ..... 46 - 47
LM80-V ..... 48 - 49
LM80-I ..... 50 - 51

Non-driven Actuators **52**
Electrak® PPA-M ..... 52 - 53
Electrak® FA14 ..... 54 - 55

Electrical Wiring Diagrams **56**
DC-actuators ..... 56 - 57
AC-actuators 58
Electrak® Throttle 59

Actuator Controls **60**
DPDT Switch 61
AC-063 ..... 62 - 63
AC-247 ELS ..... 64 - 65
Control DCG ..... 66 - 67
Control Accessories ..... 68 - 69

Accessories and Spare Parts **70**
Mounting Components ..... 70 - 71
Electrical Components ..... 72 - 73

Ordering Keys **74**
Electrak DC-actuators ..... 74 - 77
Electrak AC-actuators ..... 78 - 79
Electrac Throttle and Max Jac 80
Lifting Columns 81
Rodless Actuators and DCG Actuator Controls ..... 82 - 83
Non-driven Actuators 84

Glossary **85**
A - C 85
D - G 86
H - Life 87
Lift - O 88
P - Sp 89
St - W 90

Introduction

Company Introduction

The history of the Thomson Electrak® actuator goes back to the development of ball screw actuators 40 years ago in Marengo, IL, USA. The first generation of general purpose actuators were developed for control of accessory drives on garden tractors and farm equipment. Since that simple beginning, actuators are now used in all types of equipment to automate a process, remove people from dangerous situations, provide remote control or make difficult, tedious manual jobs easier.

The linear actuators in this catalog represent proven design concepts found in the entire Electrak series. From light load 050s to the high performance Electrak 10 series capable of handling loads up to 6800 N, Thomson offers features unavailable anywhere else.

The world's most versatile actuator selection
Thomson combined the clevis to clevis mount Electrak series, and the trunnion mount Electrak PPA units, to provide the most versatile selection of linear actuators available. Our actuator team has solved over 10000 tough application challenges with even tougher actuators. We built our reputation in the mobile off highway market in extremely demanding operating conditions. And if you can't find the actuator to meet your application, call us for a cost effective actuator built to your needs. Thomson builds more custom actuators than anyone.

You can count on Thomson
Thomson linear actuators – rugged, reliable remote linear motion control with the push of a button. You can count on Thomson for worldwide sales, service, application support and local availability. Please visit www.thomsonlinear.com for more information.

1967	1969	1974	1982	1984	1987	1988	1991
The first generation of actuators for use in garden tractors and farm equipment is released.	First line of ball screw driven actuators with right angle AC and DC motors is released.	First line of actuators with parallel motors and both acme and ball screw drive is released.	The "Tiger" line actuators are released for OEMs.	Electrak 1, 2, 5, 10 and 100 are released for distribution.	Electrak 205 and the first line of MCS controls are released.	Electrak 1SP with feedback potentiometer is released.	The first lifting columns, DMD and DMA, are released.

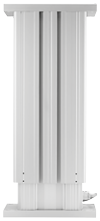

Introduction

Product Introduction

Thomson actuators are easy to mount and operate, require no maintenance, don't leak hydraulic fluid, are easy to incorporate into an automated process and once installed they will work reliably under the toughest conditions year after year.

Actuators offer advantages over mechanical and hydraulic systems in many applications. They are self-contained, rugged, and durable, making them ideal anywhere you want to lift, lower, push, pull, rotate or position a load.

Compact design
With their compact size, actuators can be located in confined areas. An actuator with a 100 mm stroke length can produce 6800 N of force from a 290 mm package. Electrak 1 and 050 series actuators fit small areas with package lengths as short as 115 mm.

Rugged and reliable
All Thomson actuators incorporate strong, high quality components to assure trouble-free service. Rugged spur, worm or helical gearing, aircraft quality lubricants and high performance motors provide the maximum life and value. The actuators are gasketed and sealed throughout for protection in wet, dirty and oily environments and are ideal for use on outdoor equipment. The rod style actuators have stainless steel or aluminum extension tubes to resist corrosion.

Maintenance-free
All adjustments and lubrication are made at the factory and no maintenance is required or recommended. Consistent, repeatable performance is provided for the entire lifetime of the actuator.

Bidirectional
Thomson actuators can push and pull loads ranging from one to 680 kg, and can extend up to 900 mm. With the Thomson series of actuator controls, you can create an actuator control system to meet your particular motion control requirements.

Safe operation
Motors used on Electrak actuators utilize thermal switches in their windings or Electronic Load Monitoring to shut the actuator off in case of overheating. A standard overload clutch or Electronic Load Monitoring will stop the motion if the load is too great or at the end of a stroke. All linear actuators will hold their loads with power removed.

Versatile
Stroke lengths of 25 to 1500 mms are available and speeds are as high as 110 mm per second. Actuators are easy to apply, quick to install and usually only requiring two wires for operation. A wide variety of options and controls makes it easy to find the perfect actuator for your application. And if you have special needs, cost effective custom solutions are our speciality.

1992	1994	1998	1999	2000	2006	2013	2014
A patent for a load lock device is granted.	Electrak 1LL is released.	Electrak 150 with two patents is released. AC control line is released.	Electrak 050 with patented design and the first rotary actuators are released.	The first LM80 rodless actuator is released.	The DCG control line is released.	Max Jac and Electrak Throttle are released.	The lifting columns range LC Series is released.

Introduction

The Benefits of Electrification

Electrification is converting manual, hydraulic and pneumatic operations to electromechanical motion. Substantially improved machine performance and cost advantages can be gained through electrification.

Reduce costs

- Electric actuation components cost less than comparable hydraulic and pneumatic systems.
- One electric linear actuator is faster and easier to install than the multiple hydraulic and pneumatic components required to achieve the same function.
- Electric actuators feature quick and predictable system tuning when compared to the headaches of configuring hydraulic systems and their components which contend with power variation, temperature variation, and non-linear performance profiles.
- Compare zero maintenance electric actuators against the fluid replacement, leak repairs and other routine maintenance needed to support hydraulic systems.
- Eliminate the environmental problems and costs associated with hydraulic fluid leaks and fluid disposal.

Boost productivity and efficiency

- Improve control over critical machine operations with:
  - Multiple digital and analog feedback options
  - Fixed and programmable limit switches for "teach and repeat" positions
  - Low voltage switching options that can interface directly with programmable PC/PLC controllers
  - Pulse width modulation for variable speed control
- Superior accuracy and repeatability
- Link and automate simultaneous processes
- Reduce down time with:
  - Zero maintenance
  - Longer component life
  - Redundancy through manual override
- Improve safety and reduce costs by removing people from danger with convenient remote control

Great opportunities for electric conversion

Making jobs easier

- Raising and lowering a deck on a mower, paver or floor scrubber.
- Shifting manual transmission.
- Lifting wheelchairs into a vehicle.
- Opening and closing doors on buses or vans.

Automating a process

- Moving twine across a round bale of hay for consistent wrap.
- Varying the chute opening on a salt/sand spreader based on speed for consistent application.
- Lift and lower pantographs on electrical trains and trams.

Providing remote control

- Throttle control from the rear of garbage trucks.
- Positioning the discharge spout on a large chipper, snowblower or combine.
- Opening a chute on a salt/sand spreader.
- Positioning of solar energy panels and wind power plant turbines.
- Opening/closing the engine hatch on boats.
- Positioning boat, handicap vehicle seats.
- Belt tensioning.

Removing people from danger

- Sliding a cover over the stairs in a recreational vehicle.
- Throttle control for a tree stump grinder to keep the operator away from moving parts or flying debris.
- Medical waste/refuse compacting.

Replacing hydraulics or pneumatics

- Power steering.
- Dump beds on ATVs.
- Positioning mower decks on golf course equipment.

Introduction

The Benefits of Electrification

Replacing hydraulic or pneumatic cylinders with electrical linear actuators means a simpler and smaller installation, easier control, lower energy costs, higher accuracy, less maintenance, less noise and a cleaner, healthier environment.

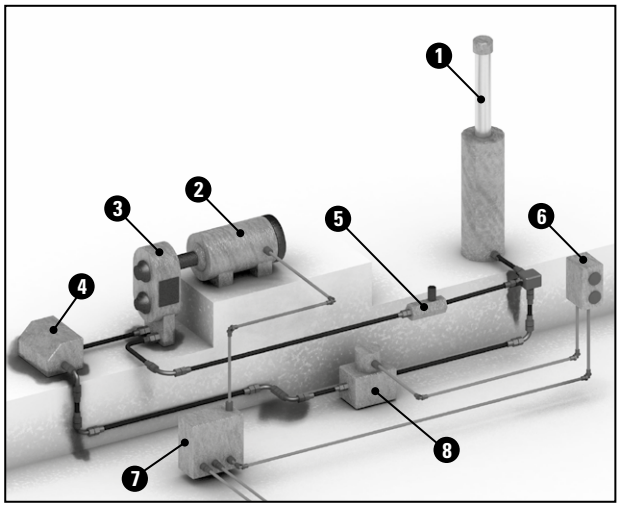

You can design, purchase and install all these components or you can select and install an actuator and control.

Single acting, uni-directional hydraulic cylinder system
1. Hydraulic cylinder
2. Electric pump motor
3. Hydraulic pump
4. Hydraulic oil resevoir
5. Check valve
6. Operator push button box
7. Relay cabinet
8. Unloading valve

This single acting, uni-directional hydraulic cylinder system is one of the simplest hydraulic solutions. This system only allows consistent performance in one direction. In order to get consistent performance in both directions a bi-directional system would be required which is even more complex and costly.

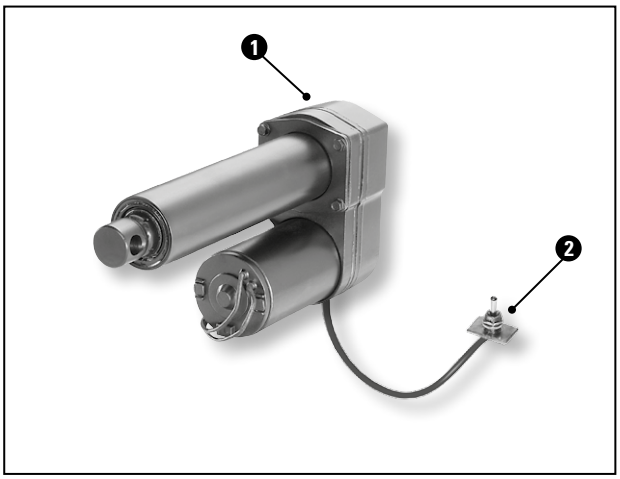

Plug and play type of connections, simple installation and no need for any set up or adjustments ensures accurate, clean and trouble free operation within the hour.

Electric linear actuator system
1. Linear actuator
2. DPDT switch

This simple electrical actuator system will ensure consistent operation in both directions. It will also give you added features such as electronic load monitoring, end of stroke limit switches, mid stroke protection and manual override operation in case of power failure. Optional features such as analog or digital position feedback, adjustable end of stroke limit switches, end of stroke indication outputs and signal following capability are also available. Another advantage is that a system like this is easy to integrate with other control systems normally found in industrial systems or vehicles such as PLC's, micro-controllers, computers or simple relay based systems.

Introduction

Actuator Applications

Thomson Electrak actuators can be found in the most diverse applications, ranging from agricultural to industrial, ventilation and medical equipment. Anywhere you want to lift, lower, push, pull, rotate or position a load - only your imagination will set the limit.

Mobile-off-highway
Actuators are widely used in agricultural, construction, mining, forestry, road work and railway equipment for the control of seats, hoods, doors, covers, balers, pantographs, sprayer booms, throttles and much more.

Turf and garden
Actuators can be found on riding lawn mowers, golf carts, garden tractors, cleaning machines, sky lifts and other utility vehicles.

Industrial equipment
Actuators are used on conveyor belts, for adjustable work tables/platforms and in the opening and closing of hatches, doors and locks. They are also common in machines for dispensing, cutting, packaging, labeling, scanning or printing.

Health and fitness
Actuators are commonly used in patient lifts/beds, handicap adapted vehicles and wheel chairs to position patients or equipment. Other applications include hospital devices, examination chairs/tables and work out/gym apparatus.

Office, domestic and entertainment equipment
At home, in the office and in the entertainment business actuators are used in automatic doors, lifts, garage doors, gates, satellite dishes, beds, reclining chairs, adjustable office desks, arcade games, vending machines, theatre/TV/movie props and theme park attractions.

Marine
On boats, ships and oil rigs actuators are used in seats, hatches, fire doors, rescue equipment, valves and throttles.

Ventilation and process control
Actuators are used for valve control in ventilation and process equipment.

Introduction

Selection Procedure

Thomson actuators have been divided into good, better and best groups to help you select the appropiate actuator for your application. By using the simple selection procedure described below and the Performance Overview on the next few pages, the process will be even easier.

Good
These actuators are the lowest cost solution, provide capable, reliable performance and have some flexibility of options and configurations. If you just need a basic actuator, this is the best choice.

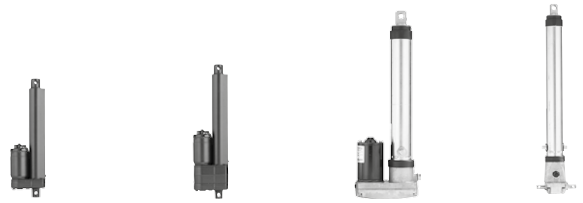

Better
These actuators have more flexibility in options, configurations and modifications. They have passed the test of time in the toughest agriculture and construction applications. Choose from this group if you need a rugged, heavy duty actuator customized to your application.

Best
These robust and strong actuators are the market leaders with state of the art technology and flexibility. They are smaller, lighter and have a shorter retracted length than other actuators on the market. If you need electronic load monitoring, programmable limit switches, digital feedback or signal following, this is the group for you.

Selection procedure
Step 1 - Determine Voltage
DC actuators can be operated by battery, a rectifier or an actuator control with 230 Vac input. AC actuators are either 230 or 400 Vac.

Step 2 - Determine Load/Speed
Select the actuator which has the load and speed rating that suits your application.

Step 3 - Select Stroke Length
Choose the desired stroke length from either the Performance Overview pages or the individual product pages.

Step 4 - Verify Design Considerations
Do you need a very short retracted length, adjustable, fixed or programmable limit switches, electronic load monitoring, digital or analog feedback, low voltage power switching, manual override, signal following, clevis mounting, tube mounting or trunnion mounting? If you need an actuator to take side loads or cantilever loads, select from the LC-Series, DMD, DMA or LM80 actuators.

Step 5 - Select Control
The controls in the catalog are designed for use with Electrak actuators and range from a simple switch to a control with membrane switches and feedback display or with a hand pendant.

On-line selection software
On www.thomsonlinear.com you can select an actuator by using the actuator product advisor. This easy to use software lets you play with all the parameters and will give you all the relevant data and the correct ordering information for your choice.

Can't find what you are looking for?
If you are an OEM customer and can't find exactly what you need, contact customer service at +46 (0)44 24 67 90 for a custom solution.

Performance Overview

Standard Rod Actuator Range

	ROD ACTUATORS					
	E 1	E 1SP	E 050	E PPA-DC	E 10	E LA14
Product availability						
North America / Europe / Asia [1]	•/•/•	•/•/•	•/•/•	•/•/•	•/•/•	/•/•
General performance						
Product group rating	good	good	better	good	better	best
Input voltage - Vdc / Vac [V]	12, 24, 36[2] /	12, 24, 36[2] /	12, 24, 36/	12, 24, 36, 90[3] /	12, 24, 36/	12, 24, 36 /
Maximum dynamic load [N]	340	340	500	6670	6800	6800
Maximum speed [mm/s]	75	75	48	33	60	60
Maximum stroke length [mm]	150	150	200	914	610	600
Restraining torque [Nm]	2,3	0	0	23	12	0
Protection class	IP65	IP65	IP56	IP52	IP65	IP65
Features						
Mounting configuration	clevis	clevis	clevis	trunnion	clevis	clevis/ trunnion
Screw type - acme / worm / ball	•/ /	•/ /	/•/	/ /•	•[2]/ /•	•/ /•
Overload clutch			•	•	•	•
Motor overload protection	•	•	•	•	•	•
End of stroke limit switches	•		•			
Potentiometer feedback		•				
Dynamic braking			•[6]			
Optional features						
End of stroke limit switches				•	•[3]	
Potentiometer feedback			•	•	•	•
Encoder feedback				•		
External adjustable magnetic sensors						•
Manual override				•[3]	•	•
More information						
See page[1]	16	18	20	22	24	26
Actuator Controls						
Recommended control	AC-247 ELS	AC-247 ELS	DCG-150	AC-063	AC-063	AC-063

[1] Products not available in this region are not further described in this catalog. Contact customer support for more information.
[2] Not available in North America. [3] Not available in Europe. [4] For horizontal operation only.
[5] For vertical operation only. [6] At end of stroke only. [7] Trapezoidal screw.

Can't find what you are looking for?
Thomson is the industry leader in custom actuator design. If you do not find the right product for your application within our standard range, please contact customer service at Phone +46 (0)44 24 67 90 for a customized solution.

Performance Overview

Standard Rod Actuator Range

ROD ACTUATORS				
	E 5	E LA24	E THROTTLE	MAX JAC
Product availability				
North America / Europe / Asia [1]	• / • / •	/ • / •	• / • / •	• / • / •
General performance				
Product group rating	better	best	best	best
Input voltage - Vdc / Vac [V]	/ 115[3], 230, 400[2]	/ 230, 400	12, 24	12, 24
Maximum dynamic load [N]	6800	6800	130	800
Maximum speed [mm/s]	60	60	96	60
Maximum stroke length [mm]	610	600	50.8	300
Restraining torque [Nm]	12	0	0	2
Protection class	IP45	IP45	IP67/IP69K	IP66/IP69K
Features				
Mounting configuration	clevis	clevis/trunnion	integrated	clevis
Screw type - acme / worm / ball	•[2] / / •	• / / •	/ • /	/ • / •
Overload clutch	•	•	•	
Motor overload protection	•	•	•	
End of stroke limit switches				
Potentiometer feedback				•
Dynamic braking				
Optional features				
End of stroke limit switches	•[3]		•	
Potentiometer feedback	•	•	•	•
Encoder feedback				•
External adjustable magnetic sensors		•		
Manual override	•	•		
More information				
See page[1]	28	30	32	34
Actuator Controls				
Recommended control	DPDT Switch	DPDT Switch	DPDT, CanBus	upon request

Can't find what you are looking for?
Thomson is the industry leader in custom actuator design. If you do not find the right product for your application within our standard range, please contact customer service at Phone +46 (0)44 24 67 90 for a customized solution.

Performance Overview

Lifting Columns

	LIFTING COLUMNS				
	LC1600	LC2000	LC3000	DMD	DMA
Product availability					
North America / Europe / Asia [1]	•/•/•	•/•/•	•/•/•	•/•/•	•/•/•
General performance					
Product group rating	best	best	best	better	better
Input voltage - Vdc / Vac [V]	24	24	24	12, 24, 36 /	/ 115[3], 230, 400[2]
Maximum dynamic load [N]	1600	2000	3000	6800	6800
Maximum speed [mm/s]	11	19	8	60	60
Maximum stroke length [mm]	400	600	400	610	610
Restraining torque [Nm]	0	0	0	0	0
Protection class	IP44	IP44	IP44	IP65	IP45
Features					
Mounting configuration	base mount	base mount	base mount	base mount	base mount
Screw type - acme / worm / ball	•/ /	telescopic	/ /•	•/ /•	•/ /•
Overload clutch				•	•
Motor overload protection				•	•
End of stroke limit switches	•	•	•		
Potentiometer feedback					
Dynamic braking	•				
Optional features					
End of stroke limit switches					
Potentiometer feedback				•[2]	•[2]
Encoder feedback	•	•	•		
External adjustable magnetic sensors					
Manual override					
More information					
See page[1]	36	38	40	42	44
Actuator Controls					
Recommended control	DCG-154	DCG-180	DCG-180	AC-063	DPDT Switch

[1] Products not available in this region are not further described in this catalog. Contact customer support for more information.
[2] Not available in North America. [3] Not available in Europe. [4] For horizontal operation only.
[5] For vertical operation only. [6] At end of stroke only. [7] Trapezoidal screw.

Can't find what you are looking for?
Thomson is the industry leader in custom actuator design. If you do not find the right product for your application within our standard range, please contact customer service at Phone +46 (0)44 24 67 90 for a customized solution.

Performance Overview

Rodless Actuators

RODLESS ACTUATORS			
	LM80-H	LM80-V	LM80-I
Product availability			
North America / Europe / Asia [1]	• / • / •	• / • / •	• / • / •
General performance			
Product group rating	better	better	better
Input voltage - Vdc / Vac [V]	12, 24 /	12, 24 /	12, 24 /
Maximum dynamic load [N]	2000[4]	2000[5]	2000[5]
Maximum speed [mm/s]	110	110	110
Maximum stroke length [mm]	1500	1500	1500
Restraining torque [Nm]	0	0	0
Protection class	IP44	IP44	IP44
Features			
Mounting configuration	T-slot	T-slot	T-slot
Screw type - acme / worm / ball	•[7] / / •	•[7] / / •	•[7] / / •
Overload clutch			
Motor overload protection			
End of stroke limit switches			
Potentiometer feedback			
Dynamic braking			
Optional features			
End of stroke limit switches			
Potentiometer feedback			
Encoder feedback			
External adjustable magnetic sensors			
Manual override	•	•	•
More information			
See page[1]	46	48	50
Actuator Controls			
Recommended control	DCG-170	DCG-160	DCG-160

Can't find what you are looking for?
Thomson is the industry leader in custom actuator design. If you do not find the right product for your application within our standard range, please contact customer service at Phone +46 (0)44 24 67 90 for a customized solution.

Performance Overview

Non-driven and Rotary Actuators

		E PPA-M	E FA14
Product availability			
North America / Europe / Asia [1]		• / • / •	/ • / •
General performance			
Product group rating		good	best
Max. input torque	[Nm]	9	1,8
Max. input speed	[rpm]	100	3000
Maximum dynamic load	[N]	6670	6800
Maximum speed	[mm/s]	8	37
Maximum stroke length	[mm]	914	600
Restraining torque	[Nm]	23	0
Standard features			
Mounting configuration		trunnion	clevis/trunnion
Screw type - acme / worm / ball		/ / •	• / / •
Overload clutch			•
Optional features			
Manual override			•
Protective bellows		•	
External adjustable magnetic sensors			•
More information			
See page[1]		52	54

[1] Products not available in this region are not further described in this catalog. Contact customer support for more information.

		ROTARY
		DGB
Product availability		
North America / Europe / Asia		• / / •
General performance		
Product group rating		better
Input voltage - Vdc / Vac	[V]	12, 24, 36 /
Maximum torque	[Nm]	20
Maximum speed	[rpm]	200
Maximum duty cycle	[%]	25
Protection class		IP56
Standard features		
Mounting configuration		clevis/tapped holes
Overload clutch		•
Motor overload protection		•
Optional features		
Dual ouput shafts		•
Manual override		•
More information		
See page[1]		–

[1] Products not available in this region are not further described in this catalog. Contact customer support for more information.

Can't find what you are looking for?

Thomson is the industry leader in custom actuator design. If you do not find the right product for your application within our standard range, please contact customer service at Phone +46 (0)44 24 67 90 for a customized solution.

Performance Overview

Legacy Actuators

	LEGACY ACTUATORS			
	E 1SL	**E 150**	**E100**	**E Pro**
Product availability				
North America / Europe / Asia	• / /	• / • / •	• / /	• / • / •
General performance				
Input voltage - Vdc / Vac [V]	12, 24 /	12, 24, 36 / 115[1]	24 /	12, 24 /
Maximum dynamic load [N]	340	2000	6800	4500
Maximum speed [mm/s]	76	71	48	51
Maximum stroke length [mm]	152	406	609	300
Restraining torque [Nm]	0	0	12	17 / 0[2]
Protection class	IP65	IP56	IP65	IP66 (67)
Standard features				
Mounting configuration	clevis	clevis	tube	clevis
Screw type - acme / worm / ball	• / /	/ • /	/ / •	• / / •
Motor overload protection		•	•	•
Potentiometer feedback			•	•
Fixed end of stroke limit switches	•			
Adjustable end of stroke limit switches			•	•
Internally restrained	•	•		
Electronic load monitoring				•
Dynamic braking				•
Manual override				•
Optional features				
Adjustable end of stroke limit switches		•		
Potentiometer feedback		•		•
Encoder feedback				•
Programmable limit switches				•
End of stroke indication outputs				•
Low voltage power switching				•
Signal follower input				•

[1] Not available in Europe. [2] Without/with anti-rotation option.

About Legacy Actuators

The legacy products will not be further described in this catalog. We recommend you choose one of the products on the preceding pages, especially when designing new equipment. However, the legacy actuators can still be purchased and we fully support them. Please contact customer support if you need more information.

About Custom Actuators

The actuators you see on these pages are some of the building blocks we use to create cost effective custom actuators for OEMs. If you can't find the actuator that meets your needs, call customer service for a custom solution. Thomson is the industry leader in custom actuator design.

Electrak® 1

12, 24 and 36 Vdc - load up to 340 N

» Ordering Key - see page 74
» Glossary - see page 85
» Electric Wiring Diagram - see page 56

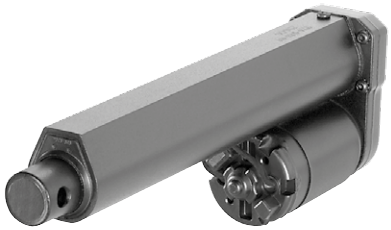

Standard Features and Benefits

- Very compact and lightweight
- Integrated end of stroke limit switches
- Corrosion resistant housing
- Self-locking acme screw drive system
- Maintenance free
- Ideal for replacement of comparable size pneumatic and hydraulic cylinders

General Specifications

Parameter	Electrak 1
Screw type	acme
Internally restrained	no
Manual override	no
Dynamic braking	no
Holding brake	no, self-locking
End of stroke protection	end of stroke limit switches
Mid stroke protection	no
Motor protection	auto reset thermal switch
Motor connection	flying leads and connector
Motor connector	Packard Electric Pack-Con male 8911773 with terminal 6294511. Mating connector: 8911772 with terminal 8911639 (p/n 9300-448-001)
Certificates	CE
Options	none

Performance Specifications

Parameter		Electrak 1
Maximum load, dynamic / static	[N]	
S • • -09A04		110 / 1300
S • • -09A08		225 / 1300
S • • -17A08		340 / 1300
S • • -17A16		340 / 1300
Speed, at no load / at maximum load	[mm/s]	
S • • -09A04		75 / 52
S • • -09A08		45 / 33
S • • -17A08		26 / 17
S • • -17A16		14 / 7
Available input voltages	[Vdc]	12, 24, 36
Standard stroke lengths	[inch]	1, 2, 3, 4, 5, 6
Operating temperature limits	[°C]	-25 – +65
Full load duty cycle @ 25 °C	[%]	25
End play, maximum	[mm]	0,9
Restraining torque	[Nm]	2,3
Lead cross section	[mm^2]	1
Lead length	[mm]	110
Protection class		IP65

Compatible Controls

Control model	See page
DPDT switch	61
AC-247 ELS	64
DCG-150	66

Electrak® 1

12, 24 and 36 Vdc - load up to 340 N

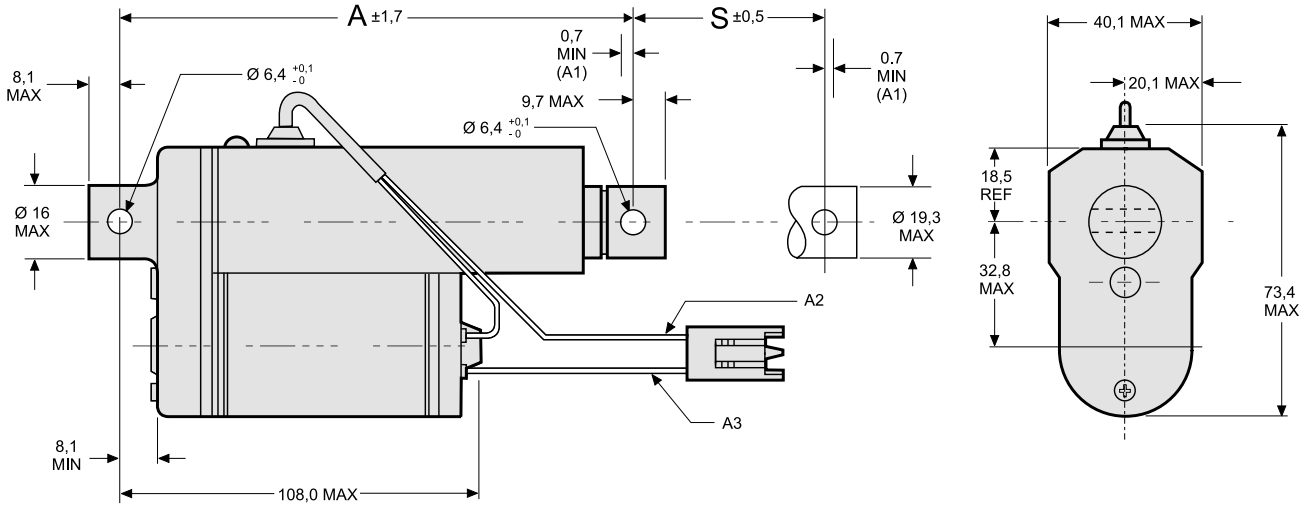

S: stroke
A: retracted length
A1: installation must include at least this much coast beyond limit switch shut off

A2: red lead
A3: yellow lead

Ordering stroke	[inch]	1	2	3	4	5	6
Electrical stroke (S) *	[mm (inch)]	20,8 (0,82)	46,2 (1,82)	71,6 (2,82)	97,0 (3,82)	122,4 (4,82)	147,8 (5,82)
Retracted length (A)	[mm]	134,5	159,9	185,3	210,7	236,1	261,5
Weight	[kg]	0,52	0,54	0,60	0,63	0,66	0,68

* The electrical stroke is the stroke when the internal limit switches switch off the power to the motor. The installation then must allow the extension tube to coast at least 0,7 mm beyond that position before it becomes mechanically blocked to travel any further (distance A1). If there is no mechanical block the extension tube coasting distance will depend on the load, no load means the longest coasting distance while the distance becomes shorter as the load becomes higher. The exact coasting distance depends on the load, in which direction the load acts (push or pull), the mounting orientation of the actuator and any added friction to the system by guides or other installations and has to be determined on a case to case basis.

Performance Diagrams

Speed and Current vs. Load 12 Vdc

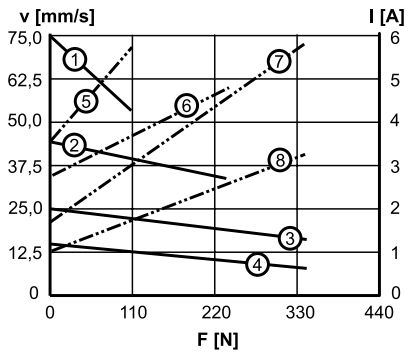

V: speed I: current F: load

1: speed S12-09A04
2: speed S12-09A08
3: speed S12-17A08
4: speed S12-17A16
5: current S12-09A04
6: current S12-09A08
7: current S12-17A08
8: current S12-17A16

Speed and Current vs. Load 24 Vdc

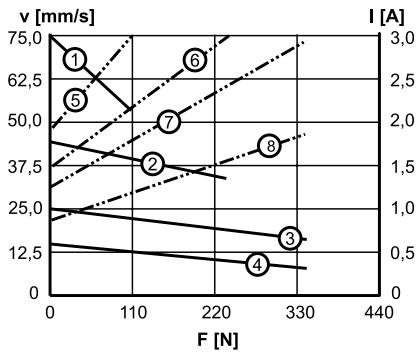

V: speed I: current F: load

1: speed S24-09A04
2: speed S24-09A08
3: speed S24 -17A08
4: speed S24-17A16
5: current S24-09A04
6: current S24-09A08
7: current S24-17A08
8: current S24-17A16

Speed and Current vs. Load 36 Vdc

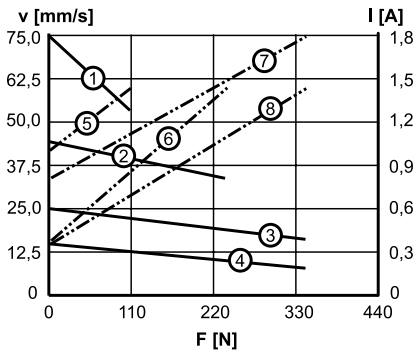

V: speed I: current F: load

1: speed S36-09A04
2: speed S36-09A08
3: speed S36-17A08
4: speed S36-17A16
5: current S36-09A04
6: current S36-09A08
7: current S36-17A08
8: current S36-17A16

Electrak® 1SP

12, 24 and 36 Vdc - load up to 340 N

» Ordering Key - see page 74
» Glossary - see page 85
» Electric Wiring Diagram - see page 56

Standard Features and Benefits

- Very compact and lightweight
- Potentiometer feedback
- Corrosion resistant housing
- Self-locking acme screw drive system
- Maintenance free
- Internally restrained extension tube
- Ideal for replacement of comparable size pneumatic and hydraulic cylinders

General Specifications

Parameter	Electrak 1SP
Screw type	acme
Internally restrained	yes
Manual override	no
Dynamic braking	no
Holding brake	no, self-locking
End of stroke protection	no
Mid stroke protection	no
Motor protection	auto reset thermal switch
Motor connection	flying leads and connector
Motor connector	Packard Electric Pack-Con male 8911773 with terminal 6294511. Mating connector: 8911772 with terminal 8911639 (p/n 9300-448-001)
Certificates	CE
Options	none

Performance Specifications

Parameter		Electrak 1SP
Maximum load, dynamic / static	[N]	
SP • • -09A04		110 / 1300
SP • • -09A08		225 / 1300
SP • • -17A08		340 / 1300
SP • • -17A16		340 / 1300
Speed, at no load / at maximum load	[mm/s]	
SP • • -09A04		75 / 52
SP • • -09A08		45 / 33
SP • • -17A08		26 / 17
SP • • -17A16		14 / 7
Available input voltages	[Vdc]	12, 24, 36
Standard stroke lengths	[inch]	2, 4, 6*
Operating temperature limits	[°C]	-25 – +65
Full load duty cycle @ 25 °C	[%]	25
End play, maximum	[mm]	0,9
Restraining torque	[Nm]	0
Lead cross section	[mm^2]	1
Lead length	[mm]	110
Protection class		IP65
Potentiometer	[kOhm]	10**

* Six inch stroke lenght not possible for SP • • -17A16.
** See table on page 19 for resistance change per mm.

Compatible Controls

Control model	See page
DPDT switch	61
AC-247 ELS	64
DCG-150	66

Electrak® 1SP

12, 24 and 36 Vdc - load up to 340 N

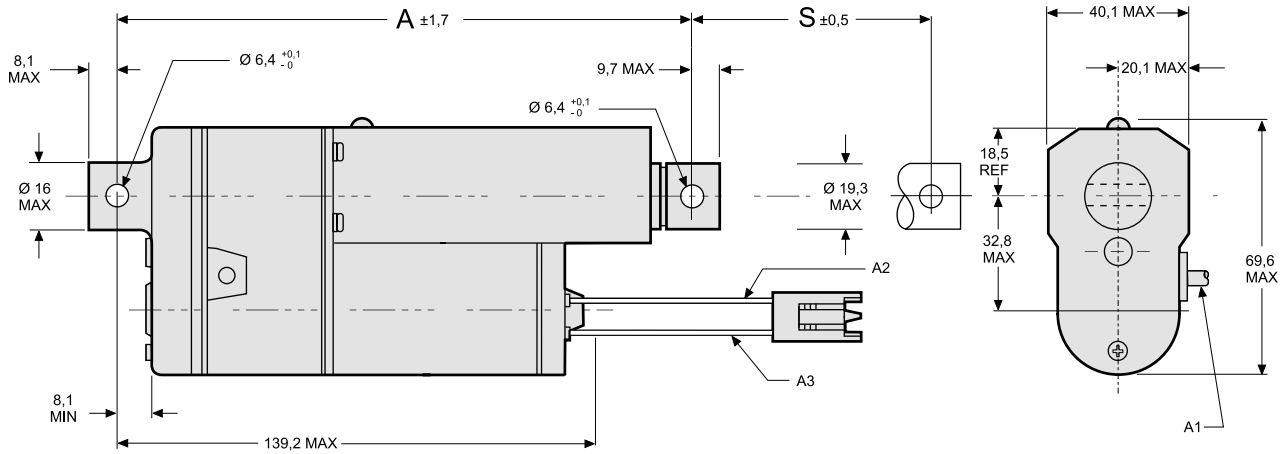

S: stroke
A: retracted length
A1: cable for potentiometer feedback, length = 635 mm

A2: black lead for 12 Vdc units, white lead for 24 Vdc units, blue lead for 36 Vdc
A3: yellow lead

Ordering stroke	[inch]	2	4	6*
Actual stroke (S)	[mm (inch)]	58,7 (2,31)	115,1 (4,53)	171,5 (6,75)
Retracted length (A)	[mm]	197,9	254,3	310,7
Weight	[kg]	0,8	0,85	0,9
Potentiometer resistance change	[ohm/mm]	94	47 (63)**	31

* Six inch stroke lenght not possible for SP • • -17A16. ** SP • • -17A16 with 4 inch stroke = 63 ohm/mm, all other stroke lengths has 47 ohm/mm.

Performance Diagrams

Speed and Current vs. Load 12 Vdc

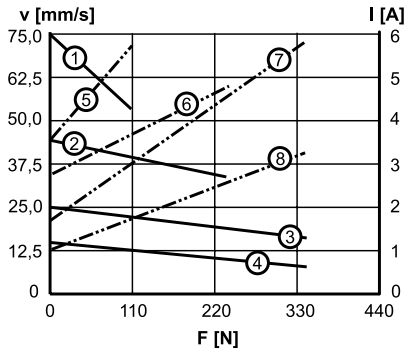

V: speed I: current F: load

1: speed SP12-09A04
2: speed SP12-09A08
3: speed SP12-17A08
4: speed SP12-17A16
5: current SP12-09A04
6: current SP12-09A08
7: current SP12-17A08
8: current SP12-17A16

Speed and Current vs. Load 24 Vdc

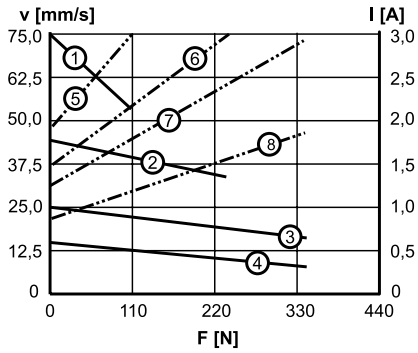

V: speed I: current F: load

1: speed SP24-09A04
2: speed SP24-09A08
3: speed SP24-17A08
4: speed SP24-17A16
5: current SP24-09A04
6: current SP24-09A08
7: current SP24-17A08
8: current SP24-17A16

Speed and Current vs. Load 36 Vdc

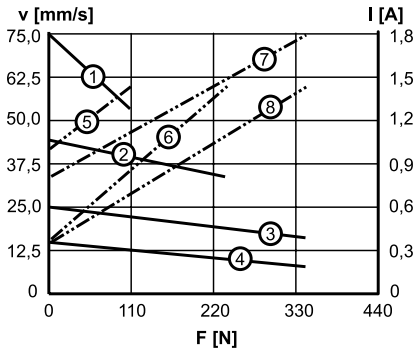

V: speed I: current F: load

1: speed SP36-09A04
2: speed SP36-09A08
3: speed SP36-17A08
4: speed SP36-17A16
5: current SP36-09A04
6: current SP36-09A08
7: current SP36-17A08
8: current SP36-17A16

Electrak® 050

12, 24 and 36 Vdc - load up to 510 N

» Ordering Key - see page 75
» Glossary - see page 85
» Electric Wiring Diagram - see page 56

Standard Features and Benefits

- Designed for office or medical applications
- Small, quiet and lightweight
- Very short retracted length
- Low cost
- Durable and corrosion free plastic housing
- Color molded into the plastic, no painting required
- End of stroke limit switches with dynamic braking
- Maintenance free
- Internally restrained extension tube
- Estimated life is minimum 40000 cycles
- Q-version for noise sensitive applications

General Specifications

Parameter	Electrak 050
Screw type	worm
Internally restrained	yes
Manual override	no
Dynamic braking	yes, at end of stroke
Holding brake	no, self-locking
End of stroke protection	internal limit switches
Mid stroke protection	overload clutch
Motor protection	auto reset thermal switch
Motor connection	flying leads
Motor connector	no
Certificates	CE
Options	• potentiometer 10 kOhm* • cross holes rotated 90° • white housing

* See performance specification table for resistance change per mm of travel.

Performance Specifications

Parameter		Electrak 050
Maximum load, dynamic / static	[N]	
DE • • • 17W41		510 / 1020
DE • • • 17W42		275 / 550
DE • • • 17W44		140 / 280
Speed, at no load / at maximum load	[mm/s]	
DE • • - 17W41		12 / 9
DE • • - 17W42		24 / 18
DE • • - 17W44		48 / 37
DE • • Q17W41		9 / 7,5
DE • • Q17W42		18 / 14
DE • • Q17W44		38 / 30
Available input voltages	[Vdc]	
DE • • -		12, 24, 36
DE • • Q		24
Standard stroke lengths	[mm]	25, 50, 75, 100, 125, 150, 175, 200
Operating temperature limits	[°C]	-30 – +80
Full load duty cycle @ 20 °C	[%]	25
End play, maximum	[mm]	1,5
Restraining torque	[Nm]	0
Lead cross section	[mm²]	1
Lead length	[mm]	500
Protection class		
DE • • -		IP56
DE • • Q		IP51
Potentiometer resistance change	[ohm/mm]	
DE • • • 17W41		22,0
DE • • • 17W42		21,9
DE • • • 17W44		21,2

Compatible Controls

Control model	See page
DPDT switch	61
AC-247 ELS	64
DCG-150	66

Electrak® 050

12, 24 and 36 Vdc - load up to 510 N

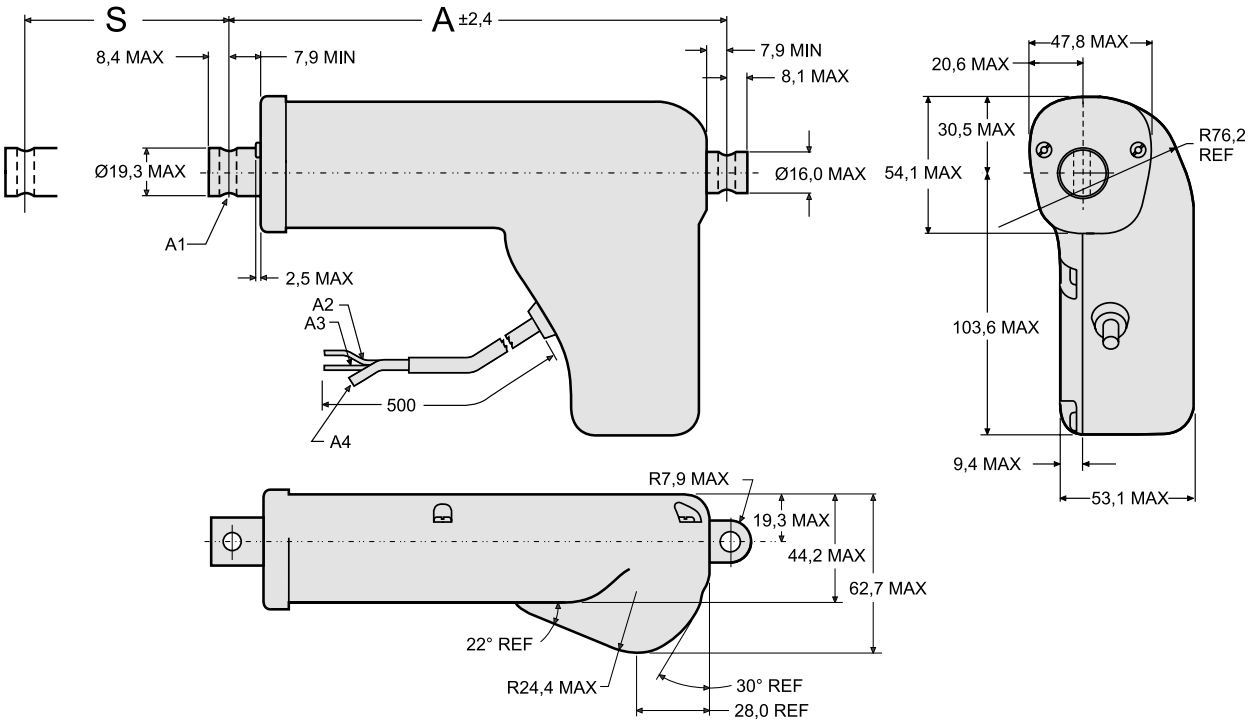

S: stroke (tolerances: 17W41 = ± 3,23 mm, 17W42 = ± 4,25 mm, 17W44 = ± 5,26 mm)
A: retracted length
A1: Ø 6 mm +0,15/ -0 mounting cross holes (2 ×) in standard position

A2: red lead
A3: yellow lead
A4: vent tube Ø 3 mm

Stroke (S)	[mm]	25	50	75	100	125	150	175	200
Retracted length (A)	[mm]	114,2	139,2	164,2	189,2	214,2	239,2	264,2	289,2
Retracted length, with potentiometer (A)	[mm]	145,7	170,7	195,7	220,7	245,7	270,7	295,7	- *
Weight	[kg]	0,59	0,64	0,69	0,73	0,78	0,82	0,87	0,91
Weight with potentiometer	[kg]	0,69	0,74	0,79	0,83	0,88	0,92	0,97	- *

* 200 mm stroke not possible with potentiometer (PO, MP, PF options)

Performance Diagrams

050, standard version
Speed and Current vs. Load

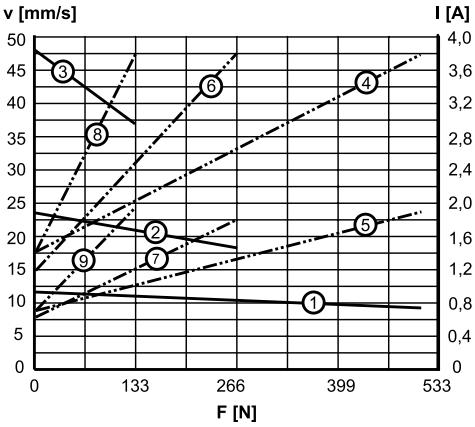

050, Q-version
Speed and Current vs. Load

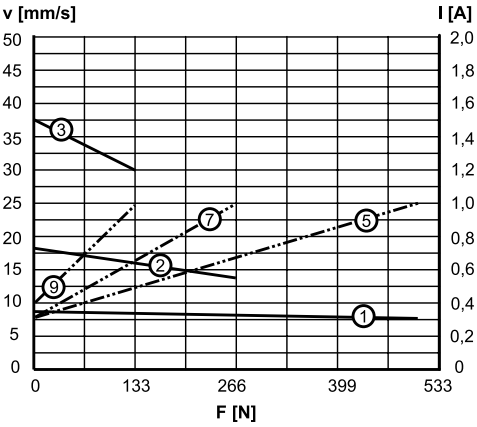

V: speed I: current F: load
1: speed DE • • • 17W41
2: speed DE • • • 17W42
3: speed DE • • • 17W44
4: current 12 Vdc, DE12 - 17W41
5: current 24 Vdc, DE24 • 17W41
6: current 12 Vdc, DE12 - 17W42
7: current 24 Vdc, DE24 • 17W42
8: current 12 Vdc, DE12 - 17W44
9: current 24 Vdc, DE24 • 17W44

Electrak® PPA-DC

12, 24 and 36 Vdc - load up to 6670 N

» Ordering Key - see page 75
» Glossary - see page 85
» Electric Wiring Diagram - see page 57

Standard Features and Benefits

- Strong and versatile heavy duty actuator
- High duty cycle
- Highly efficient ball screw drive system
- Overload clutch for mid and end of stroke protection
- Stroke lengths up to 36 inch (914 mm)
- Three different input voltages to choose from
- Motor with thermal switch
- Maintenance free
- Large range of options

General Specifications

Parameter	Electrak PPA-DC
Screw type	ball
Internally restrained	no
Manual override	no, optional
Dynamic braking	no
Holding brake	yes
End of stroke protection	overload clutch
Mid stroke protection	overload clutch
Motor protection	auto reset thermal switch
Motor connection	flying leads
Motor connector	no
Certificates	CE
Options	• end of stroke limit switches • potentiometer • encoder • protective bellows

Performance Specifications

Parameter		PPA-DC
Maximum load, dynamic / static PPA • • -18B65 PPA • • -58B65	[N]	 3330 / 13350 6670 / 13350
Speed, at no load / at maximum load PPA12(24/36)-18B65 PPA12(24/36)-58B65	[mm/s]	 32 / 28 12 / 9
Available input voltages	[Vdc]	12, 24, 36
Standard stroke lengths	[inch]	4, 8, 12, 18, 24, 36
Operating temperature limits	[°C]	-25 – +65
Full load duty cycle @ 25 °C	[%]	30
End play, maximum	[mm]	1
Restraining torque PPA • • -18B65 PPA • • -58B65	[Nm]	 11 22
Lead cross section	[mm²]	2
Lead length	[mm]	420
Protection class		IP52

Compatible Controls

Control model	See page
DPDT switch	61
AC-063	62

Electrak® PPA-DC

12, 24 and 36 Vdc - load up to 6670 N

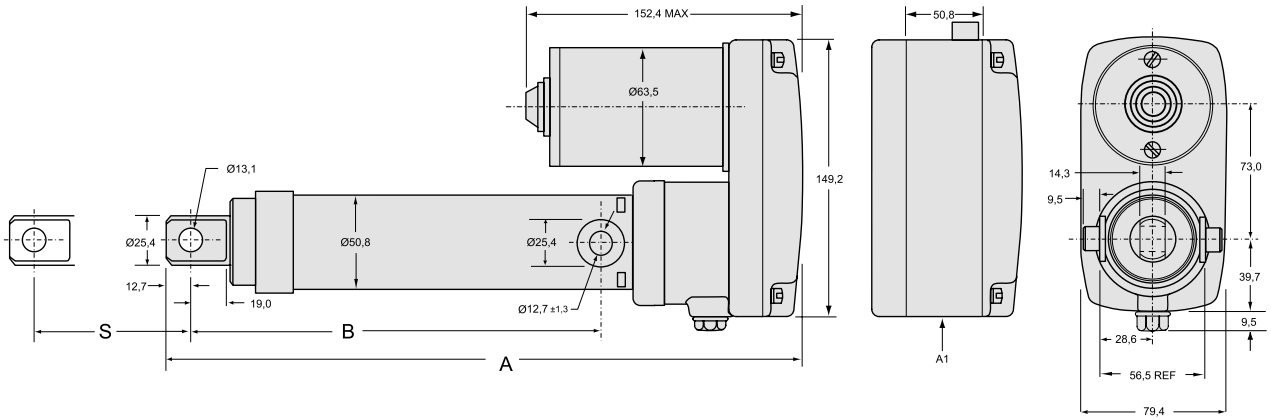

S: stroke
A: retracted length

B: retracted length to trunnions
A1: housing dimensions for limit switch, encoder or potentiometer options

Stroke (S)	[inch (mm)]	4 (101,6)	8 (203,2)	12 (304,8)	18 (457,2)	24 (609,6)	36 (914,4)
Retracted length (A) without options	[mm]	348,0	449,6	551,2	754,4	906,8	1211,6
Retracted length (A) with limit switch, encoder or potentiometer	[mm]	398,8	500,4	602,0	805,2	957,6	1262,4
Retracted length to trunnions (B)	[mm]	223,5	352,1	426,7	629,9	782,3	1087,1
Weight	[kg]	4,5	5,3	6,0	7,2	8,4	10,8
Add on weight for limit switch, encoder or potentiometer	[kg]	0,5	0,5	0,5	0,5	0,5	0,5

Performance Diagrams

Speed and Current vs. Load

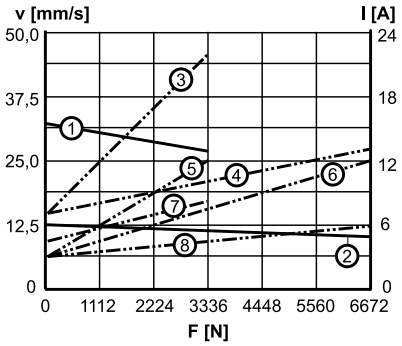

V: speed I: current F: load

1: speed PPA • • -18B65
2: speed PPA • • -58B65
3: current 12 Vdc, PPA12-18B65
4: current 12 Vdc, PPA12-58B65
5: current 24 Vdc, PPA24-18B65
6: current 24 Vdc, PPA24-58B65
7: current 36 Vdc, PPA36-18B65
8: current 36 Vdc, PPA36-58B65

Electrak® 10

12, 24 and 36 Vdc - load up to 6800 N

» Ordering Key - see page 75
» Glossary - see page 85
» Electric Wiring Diagram - see page 57

Standard Features and Benefits

- Robust, strong and reliable
- Withstands very harsh environments
- Stainless steel extension tube
- Acme or ball screw models
- Overload clutch for mid and end of stroke protection
- Motor with thermal switch
- Maintenance free

General Specifications

Parameter	Electrak 10
Screw type	acme or ball
Internally restrained	no
Manual override	no, optional
Dynamic braking	no
Holding brake acme screw models ball screw models	 no, self-locking yes
End of stroke protection	overload clutch
Mid stroke protection	overload clutch
Motor protection	auto reset thermal switch
Motor connection	flying leads and connector
Motor connector	AMP connector with housing p/n 180908-5 with male terminals p/n 42098-2
Certificates	CE
Options	• potentiometer • manual override

Performance Specifications

Parameter		Electrak 10
Maximum load, dynamic / static	[N]	
D • • -05A5 (acme screw)		1100 / 11350
D • • -10A5 (acme screw)		2250 / 11350
D • • -20A5 (acme screw)		2250 / 11350
D • • -05B5 (ball screw)		2250 / 18000
D • • -10B5 (ball screw)		4500 / 18000
D • • -20B5 (ball screw)		4500 / 18000
D • • -21B5 (ball screw)		6800 / 18000
Speed, at no load / at maximum load	[mm/s]	
D • • -05A5 (acme screw)		54 / 32
D • • -10A5 (acme screw)		30 / 18
D • • -20A5 (acme screw)		15 / 12
D • • -05B5 (ball screw)		61 / 37
D • • -10B5 (ball screw)		30 / 19
D • • -20B5 (ball screw)		15 / 12
D • • -21B5 (ball screw)		15 / 11
Available input voltages	[Vdc]	12, 24, 36 *
Standard stroke lengths	[inch]	4, 6, 8, 10, 12, 14, 16, 18, 20, 24
Operating temperature limits	[°C]	-25 – +65
Full load duty cycle @ 25 °C	[%]	25
End play, maximum	[mm]	1,0
Restraining torque	[Nm]	11,3
Lead cross section	[mm²]	2
Lead length	[mm]	165
Protection class		IP65

* Other input voltages available on request, contact customer support.

Compatible Controls

Control model	See page
DPDT switch	61
AC-063	62

Electrak® 10

12, 24 and 36 Vdc - load up to 6800 N

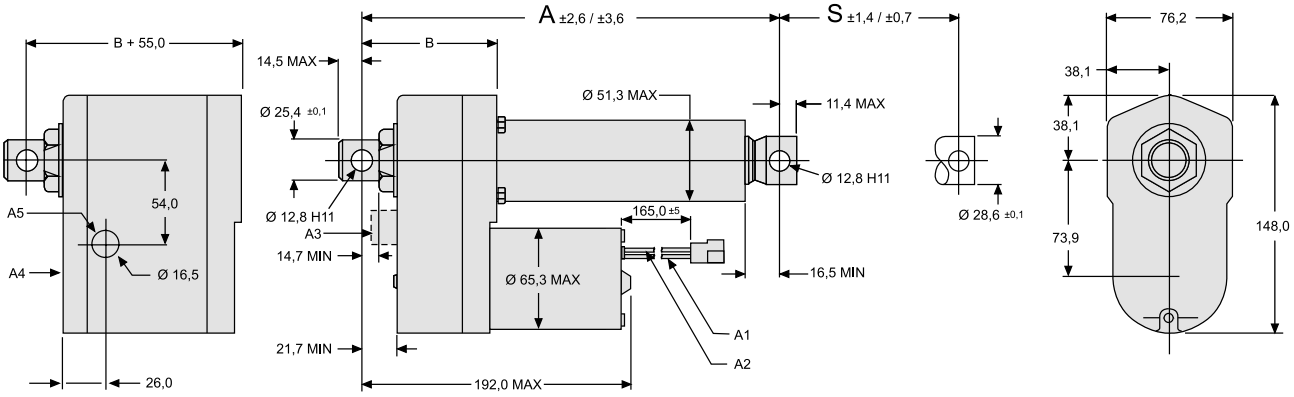

S: stroke, tolerance acme / ball screw
A: retracted length, tolerance acme / ball screw
A1: black lead
A2: red lead
A3: manual override input (optional)
A4: housing dimensions for potentiometer option
A5: potentiometer cable output, cable length = min. 500 mm
B: 86,1 mm

Stroke (S)	[inch (mm)]	4 (101,6)	6 (152,4)	8 (203,2)	10 (254,0)	12 (304,8)	14 (355,6)	16 (406,4)	18 (457,2)	20 (508,0)	24 (609,6)
Retracted length, acme screw models (A)	**[mm]**	262,3	313,1	363,9	414,7	465,5	567,1	617,9	668,7	719,5	821,1
Retracted length, ball screw models (A)	**[mm]**	302,3	353,1	403,9	454,7	505,5	607,1	657,9	708,7	759,5	861,1
Add on length for potentiometer*	**[mm]**	55,0	55,0	55,0	55,0	55,0	55,0	55,0	55,0	55,0	55,0
Weight, acme screw models	**[kg]**	4,5	4,7	4,9	5,0	5,2	5,4	5,5	5,7	5,8	6,2
Weight, ball screw models	**[kg]**	5,1	5,3	5,5	5,6	5,8	5,9	6,1	6,3	6,4	6,8
Add on weight for potentiometer*	**[kg]**	1,3	1,3	1,3	1,3	1,3	1,3	1,3	1,3	1,3	1,3
Potentiometer resistance change*	**[ohm/mm]**	39	39	39	39	20	20	20	20	20	10

* Potentiometer is optional

Performance Diagrams

Acme Screw Models
Speed and Current vs. Load

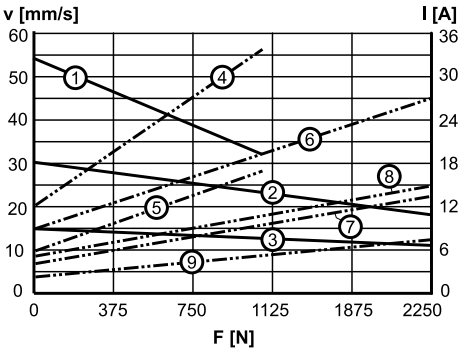

V: speed
I: current
F: load

1: speed D • • -05A5
2: speed D • • -10A5
3: speed D • • -20A5

4. current 12 Vdc, D12-05A5
5: current 24 Vdc, D24-05A5
6: current 12 Vdc, D12-10A5
7: current 24 Vdc, D24-10A5
8: current 12 Vdc, D12-20A5
9: current 24 Vdc, D24-20A5

Ball Screw Models
Speed and Current vs. Load

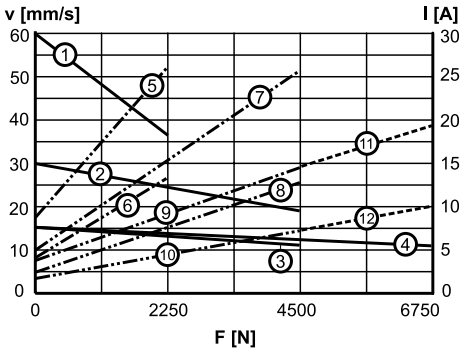

V: speed
I: current
F: load

1: speed D • • -05B5
2: speed D • • -10B5
3: speed D • • -20B5
4: speed D • • -21B5

5. current 12 Vdc, D12-05B5
6: current 24 Vdc, D24-05B5
7: current 12 Vdc, D12-10B5
8: current 24 Vdc, D24-10B5
9: current 12 Vdc, D12-20B5
10: current 24 Vdc, D24-20B5
11: current 12 Vdc, D12-21B5
12: current 24 Vdc, D24-21B5

Electrak® LA14

12, 24 and 36 Vdc - load up to 6800 N

» Ordering Key - see page 77
» Glossary - see page 85
» Electric Wiring Diagram - see page 56

Standard Features and Benefits

- Rugged and robust
- Withstands very harsh environments
- Stainless steel extension tube
- Corrosion free aluminium cover tube
- Acme or ball screw drive
- Trunnion mounting possible
- Overload clutch for mid and end of stroke protection
- T-slot grooves in the cover tube for magnetic sensors
- Motor with thermal switch
- Maintenance free

General Specifications

Parameter	Electrak LA14
Screw type	acme or ball
Internally restrained	yes
Manual override	no, optional
Dynamic braking	no
Holding brake acme screw models ball screw models	 no, self-locking yes
End of stroke protection	overload clutch
Mid stroke protection	overload clutch
Motor protection	auto reset thermal switch
Motor connection	flying leads and connector
Motor connector	AMP connector with housing p/n 180908-5 with male terminals p/n 42098-2
Certificates	CE
Options	• potentiometer • manual override

Performance Specifications

Parameter		Electrak LA14
Maximum load, dynamic / static	[N]	
DA • • -05A65M (acme screw)		1100 / 11350
DA • • -10A65M (acme screw)		2250 / 11350
DA • • -20A65M (acme screw)		2250 / 11350
DA • • -05B65M (ball screw)		2250 / 18000
DA • • -10B65M (ball screw)		4500 / 18000
DA • • -20B65M (ball screw)		4500 / 18000
DA • • -21B65M (ball screw)		6800 / 18000
Speed, at no load / at maximum load	[mm/s]	
DA • • -05A65M (acme screw)		54 / 32
DA • • -10A65M (acme screw)		30 / 18
DA • • -20A65M (acme screw)		15 / 12
DA • • -05B65M (ball screw)		61 / 37
DA • • -10B65M (ball screw)		30 / 19
DA • • -20B65M (ball screw)		15 / 12
DA • • -21B65M (ball screw)		15 / 11
Available input voltages	[Vdc]	12, 24, 36 *
Standard stroke lengths	[mm]	50, 100, 150, 200, 250, 300, 350, 400, 450, 500, 550, 600
Operating temperature limits	[°C]	-25 – +65
Full load duty cycle @ 25 °C	[%]	25
End play, maximum	[mm]	1,0
Restraining torque	[Nm]	0
Lead cross section	[mm²]	2
Lead length	[mm]	165
Protection class		IP65

* Other input voltages available on request, contact customer support.

Compatible Controls

Control model	See page
DPDT switch	61
AC-063	62

Electrak® LA14

12, 24 and 36 Vdc - load up to 6800 N

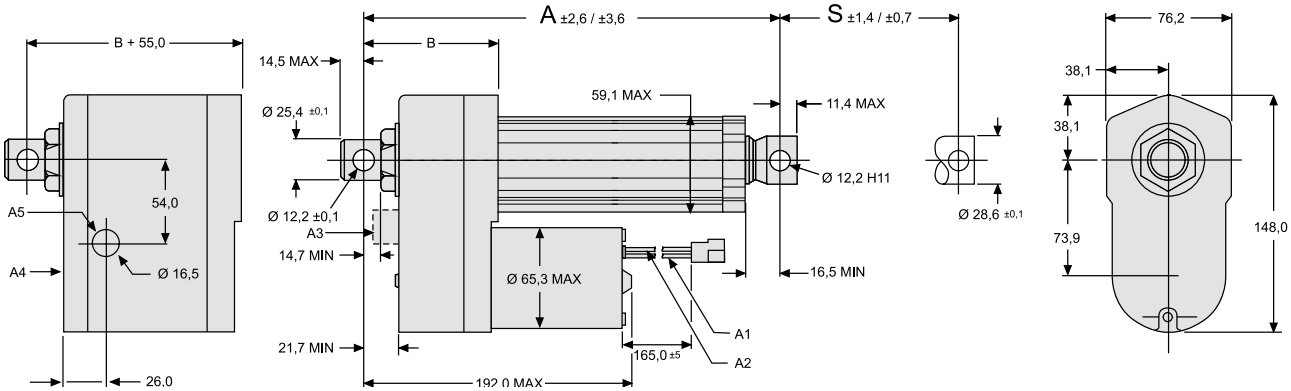

S: stroke, tolerance acme / ball screw
A: retracted length, tolerance acme / ball screw
A1: black lead
A2: red lead
A3: manual override input (optional)
A4: housing dimensions for potentiometer option
A5: potentiometer cable output, cable length = min. 500 mm
B: 86,1 mm

Stroke (S)	[mm]	50	100	150	200	250	300	350	400	450	500	550	600
Retracted length, acme screw models (A)	[mm]	216,7	266,7	316,7	366,7	416,7	466,7	566,7	616,7	666,7	716,7	766,7	816,7
Retracted length, ball screw models (A)	[mm]	269,6	319,6	369,6	419,6	469,6	519,6	619,6	669,6	719,6	769,6	819,6	869,6
Add on length for potentiometer*	[mm]	55,0	55,0	55,0	55,0	55,0	55,0	55,0	55,0	55,0	55,0	55,0	55,0
Weight, acme screw models	[kg]	4,5	4,7	4,9	5,1	5,3	5,5	5,8	6,0	6,2	6,4	6,6	6,8
Weight, ball screw models	[kg]	5,3	5,5	5,7	5,9	6,1	6,3	6,6	6,8	7,0	7,2	7,4	7,6
Add on weight for potentiometer*	[kg]	1,3	1,3	1,3	1,3	1,3	1,3	1,3	1,3	1,3	1,3	1,3	1,3
Potentiometer resistance change*	[ohm/mm]	39	39	39	39	39	20	20	20	20	20	10	10

* Potentiometer is optional

Performance Diagrams

Acme Screw Models
Speed and Current vs. Load

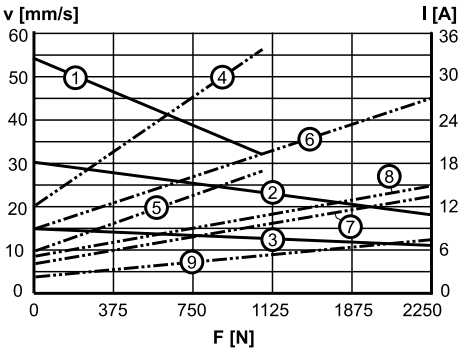

V: speed
I: current
F: load

1: speed DA • • -05A65M
2: speed DA • • -10A65M
3: speed DA • • -20A65M
4. current 12 Vdc, DA12-05A65M
5: current 24 Vdc, DA24-05A65M
6: current 12 Vdc, DA12-10A65M
7: current 24 Vdc, DA24-10A65M
8: current 12 Vdc, DA12-20A65M
9: current 24 Vdc, DA24-20A65M

Ball Screw Models
Speed and Current vs. Load

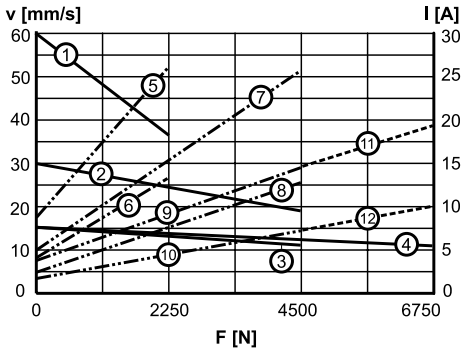

V: speed
I: current
F: load

1: speed DA • • -05B65M
2: speed DA • • -10B65M
3: speed DA • • -20B65M
4: speed DA • • -21B65M
5. current 12 Vdc, DA12-05B65M
6: current 24 Vdc, DA24-05B65M
7: current 12 Vdc, DA12-10B65M
8: current 24 Vdc, DA24-10B65M
9: current 12 Vdc, DA12-20B65M
10: current 24 Vdc, DA24-20B65M
11: current 12 Vdc, DA12-21B65M
12: current 24 Vdc, DA24-21B65M

Electrak® 5

230 and 400 Vac - load up to 6800 N

» Ordering Key - see page 78
» Glossary - see page 85
» Electric Wiring Diagram - see page 58

Standard Features and Benefits

- Robust, strong and reliable
- Stainless steel extension tube
- Acme or ball screw models
- Overload clutch for mid and end of stroke protection
- Heavy duty motor with thermal switch
- Anti-coast brake for repeatable positioning on all ball screw models. Optional on acme screw models.
- Maintenance free

General Specifications

Parameter	Electrak 5
Screw type	acme or ball
Internally restrained	no
Manual override	no, optional
Dynamic braking	no
Holding brake acme screw models ball screw models	 no, self-locking yes
End of stroke protection	overload clutch
Mid stroke protection	overload clutch
Motor protection	auto reset thermal switch
Motor connection	cable
Motor connector	no
Certificates	UL, CSA, CE
Options	• potentiometer • manual override

Performance Specifications

Parameter		Electrak 5
Maximum load, dynamic / static	[N]	
A • • -05A5 (acme screw)*		1100 / 11350
A • • -10A5 (acme screw)		2250 / 11350
A • • -20A5 (acme screw)		2250 / 11350
A • • -05B5 (ball screw)		2250 / 18000
A • • -10B5 (ball screw)		4500 / 18000
A • • -20B5 (ball screw)		4500 / 18000
A • • -21B5 (ball screw)		6800 / 18000
Speed, at no load / at maximum load	[mm/s]	
A • • -05A5 (acme screw)*		48 / 38
A • • -10A5 (acme screw)		30 / 18
A • • -20A5 (acme screw)		15 / 12
A • • -05B5 (ball screw)		61 / 37
A • • -10B5 (ball screw)		30 / 19
A • • -20B5 (ball screw)		15 / 12
A • • -21B5 (ball screw)		15 / 11
Available input voltages Single phase Three phase	[Vac]	 230** 400
Input frequency 1 × 230 Vac model 3 × 400 Vac model	[Hz]	 50/60 50
Standard stroke lengths	[inch]	4, 6, 8, 10, 12, 14, 16, 18, 20, 24
Operating temperature limits	[°C]	-25 – +65
Full load duty cycle @ 25 °C	[%]	25
Maximum on time	[s]	45
End play, maximum	[mm]	1,0
Restraining torque	[Nm]	11,3
Lead cross section	[mm²]	1,5
Cable length	[mm]	600
Protection class		IP45

* Not possible with 400 Vac input voltage.
** 10 µF capacitor required to run the actuator, p/n 9200-448-003

Compatible Controls

Control model	See page
DPDT switch	61

Electrak® 5

230 and 400 Vac - load up to 6800 N

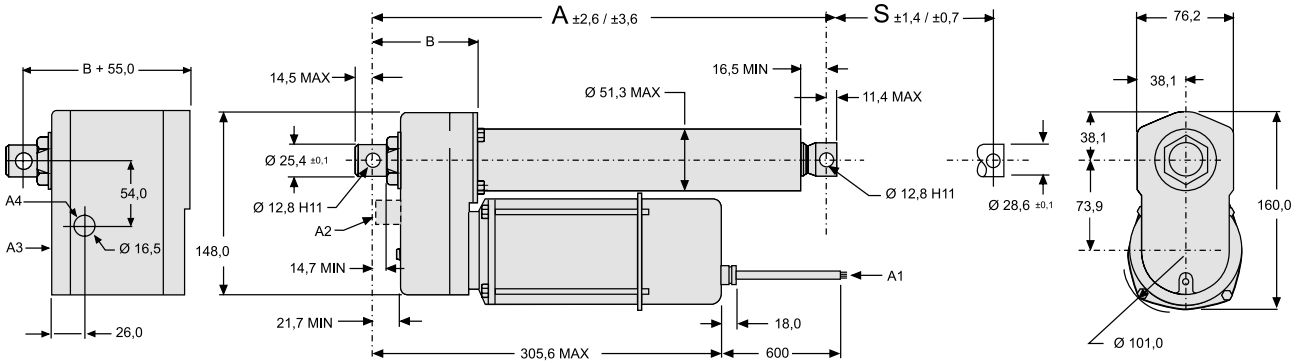

S: stroke, tolerance acme / ball screw
A: retracted length, tolerance acme / ball screw
A1: cable
A2: manual override input (optional)
A3: housing dimensions for potentiometer option
A4: potentiometer cable output, cable length = min. 500 mm
B: 86,1 mm

Stroke (S)	[inch (mm)]	4 (101,6)	6 (152,4)	8 (203,2)	10 (254,0)	12 (304,8)	14 (355,6)	16 (406,4)	18 (457,2)	20 (508,0)	24 (609,6)
Retracted length, acme screw models (A)	**[mm]**	262,3	313,1	363,9	414,7	465,5	567,1	617,9	668,7	719,5	821,1
Retracted length, ball screw models (A)	**[mm]**	302,3	353,1	403,9	454,7	505,5	607,1	657,9	708,7	759,5	861,1
Add on length for potentiometer*	**[mm]**	55,0	55,0	55,0	55,0	55,0	55,0	55,0	55,0	55,0	55,0
Weight, acme screw models	**[kg]**	5,9	6,1	6,3	6,5	6,7	6,9	7,1	7,3	7,5	7,8
Weight, ball screw models	**[kg]**	6,5	6,7	6,9	7,1	7,3	7,5	7,7	7,9	8,1	8,4
Add on weight for potentiometer*	**[kg]**	1,3	1,3	1,3	1,3	1,3	1,3	1,3	1,3	1,3	1,3
Potentiometer resistance change*	**[ohm/mm]**	39	39	39	39	20	20	20	20	20	10

* Potentiometer is optional (NPO, BPO option)

Performance Diagrams

Acme Screw Models
Speed and Current vs. Load

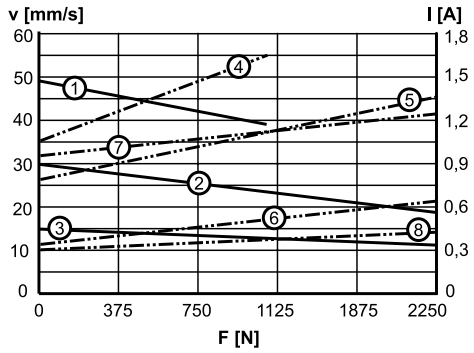

V: speed
I: current
F: load

1: speed A22 -05A5
2: speed A• • -10A5
3: speed A• • -20A5
4. current 230 Vac, A22-05A5
5: current 230 Vac, A22-10A5
6: current 400 Vac, A42-10A5
7: current 230 Vac, A22-20A5
8: current 400 Vac, A42-20A5

Ball Screw Models
Speed and Current vs. Load

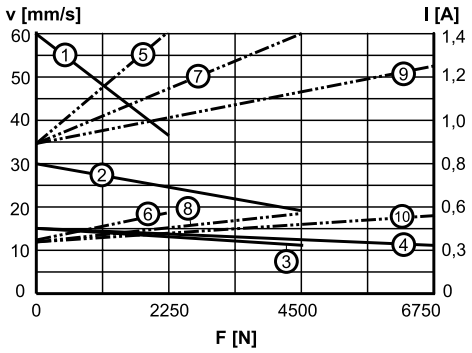

V: speed
I: current
F: load

1: speed A22-05B5, A42-05B5
2: speed A22-10B5, A42-10B5
3: speed A22-20B5, A42-20B5
4: speed A22-21B5, A42-21B5
5. current 230 Vac, A22-05B5
6: current 400 Vac, A42-05B5
7: current 230 Vac, A22-10B5, A22-20B5
8: current 400 Vac, A42-10B5, A42-20B5
9: current 230 Vac, A22-21B5
10: current 400 Vac, A42-21B5

Electrak® LA24

230 and 400 Vac - load up to 6800 N

» Ordering Key - see page 79
» Glossary - see page 85
» Electric Wiring Diagram - see page 58

Standard Features and Benefits

- Robust, strong and reliable
- Corrosion free aluminium cover tube
- Stainless steel extension tube
- Acme or ball screw models
- Rugged and robust
- Withstands very harsh environments
- Trunnion mounting possible
- Overload clutch for mid and end of stroke protection
- T-slot grooves in the cover tube for magnetic sensors
- Heavy duty motor with thermal switch
- Anti-coast brake for repeatable positioning on all ball screw models. Optional on acme screw models.
- Maintenance free

General Specifications

Parameter	Electrak LA24
Screw type	acme or ball
Internally restrained	yes
Manual override	no, optional
Dynamic braking	no
Holding brake acme screw models ball screw models	 no, self-locking yes
End of stroke protection	overload clutch
Mid stroke protection	overload clutch
Motor protection	auto reset thermal switch
Motor connection	cable
Motor connector	no
Certificates	UL, CSA, CE
Options	• potentiometer • manual override

Performance Specifications

Parameter		Electrak LA24
Maximum load, dynamic / static	[N]	
AA • • -05A65M (acme screw)*		1100 / 11350
AA • • -10A65M (acme screw)		2250 / 11350
AA • • -20A65M (acme screw)		2250 / 11350
AA • • -05B65M (ball screw)		2250 / 18000
AA • • -10B65M (ball screw)		4500 / 18000
AA • • -20B65M (ball screw)		4500 / 18000
AA • • -21B65M (ball screw)		6800 / 18000
Speed, at no load / at maximum load	[mm/s]	
AA • • -05A65M (acme screw)*		48 / 38
AA • • -10A65M (acme screw)		30 / 18
AA • • -20A65M (acme screw)		15 / 12
AA • • -05B65M (ball screw)		61 / 37
AA • • -10B65M (ball screw)		30 / 19
AA • • -20B65M (ball screw)		15 / 12
AA • • -21B65M (ball screw)		15 / 11
Available input voltages Single phase Three phase	[Vac]	 230** 400
Input frequency 1 × 230 Vac model 3 × 400 Vac model	[Hz]	 50/60 50
Standard stroke lengths	[inch]	50, 100, 150, 200, 250, 300, 350, 400, 450, 500, 550, 600
Operating temperature limits	[°C]	-25 – +65
Full load duty cycle @ 25 °C	[%]	25
Maximum on time	[s]	45
End play, maximum	[mm]	1,0
Restraining torque	[Nm]	0
Lead cross section	[mm²]	1,5
Cable length	[mm]	600
Protection class		IP45

* Not possible with 400 Vac input voltage.
** 10 µF capacitor required to run the actuator, p/n 9200-448-003

Compatible Controls

Control model	See page
DPDT switch	61

Electrak® LA24

230 and 400 Vac - load up to 6800 N

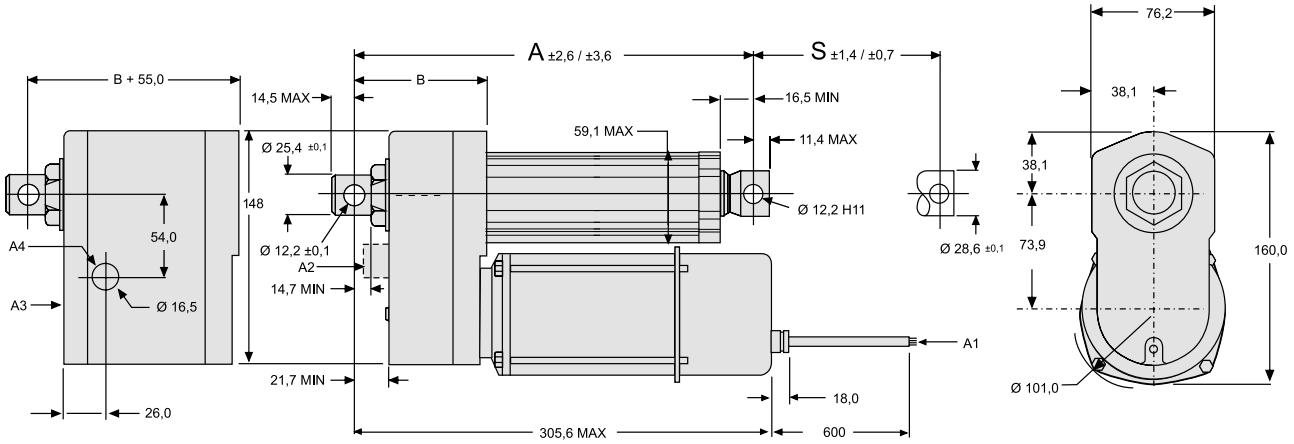

S: stroke, tolerance acme / ball screw
A: retracted length, tolerance acme / ball screw
A1: cable
A2: manual override input (optional)
A3: housing dimensions for potentiometer option
A4: potentiometer cable output, cable length = min. 500 mm
B: 86,1 mm

Stroke (S)	[mm]	50	100	150	200	250	300	350	400	450	500	550	600
Retracted length, acme screw models (A)	[mm]	216,7	266,7	316,7	366,7	416,7	466,7	566,7	616,7	666,7	716,7	766,7	816,7
Retracted length, ball screw models (A)	[mm]	269,6	319,6	369,6	419,6	469,6	519,6	619,6	669,6	719,6	769,6	819,6	869,6
Add on length for potentiometer*	[mm]	55,0	55,0	55,0	55,0	55,0	55,0	55,0	55,0	55,0	55,0	55,0	55,0
Weight, acme screw models	[kg]	6,0	6,2	6,4	6,6	6,8	7,0	7,3	7,5	7,7	7,9	8,1	8,3
Weight, ball screw models	[kg]	6,8	7,0	7,2	7,4	7,6	7,8	8,1	8,3	8,5	8,7	8,9	9,1
Add on weight for potentiometer*	[kg]	1,3	1,3	1,3	1,3	1,3	1,3	1,3	1,3	1,3	1,3	1,3	1,3
Potentiometer resistance change*	[ohm/mm]	39	39	39	39	39	20	20	20	20	20	10	10

* Potentiometer is optional (NPO, BPO option)

Performance Diagrams

Acme Screw Models
Speed and Current vs. Load

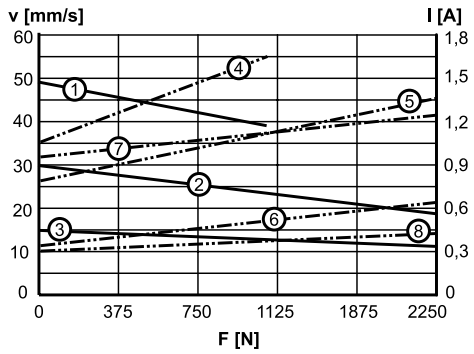

V: speed
I: current
F: load

1: speed AA22 -05A65M
2: speed AA• • -10A65M
3: speed AA• • -20A65M
4. current 230 Vac, AA22-05A65M
5: current 230 Vac, AA22-10A65M
6: current 400 Vac, AA42-10A65M
7: current 230 Vac, AA22-20A65M
8: current 400 Vac, AA42-20A65M

Ball Screw Models
Speed and Current vs. Load

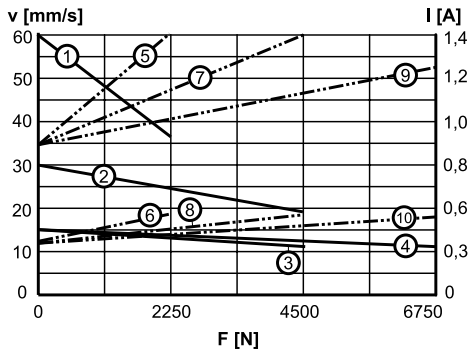

V: speed
I: current
F: load

1: speed AA22-05B65M, AA42-05B65M
2: speed AA22-10B65M, AA42-10B65M
3: speed AA22-20B65M, AA42-20B65M
4: speed AA22-21B65M, AA42-21B65M
5. current 230 Vac, AA22-05B65M
6: current 400 Vac, AA42-05B65M
7: current 230 Vac, AA22-10B65M, AA22-20B65M
8: current 400 Vac, AA42-10B65M, AA42-20B65M
9: current 230 Vac, AA22-21B65M
10: current 400 Vac, AA42-21B65M

Electrak® Throttle

12 and 24 Vdc - load up to 130 N

» Ordering Key - see page 80
» Glossary - see page 85
» Electric Wiring Diagram - see page 59

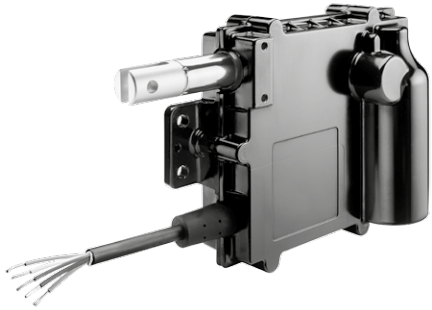

Standard Features and Benefits

- Designed for industrial applications
- Rugged aluminum housing with IP69K/IP67 sealing
- E-coated housing for corrosion resistance
- Minimal maintenance
- Integrated electronic options
- High end features at a low cost
- Integrated mounting holes

General Specifications

Parameter	Electrak Throttle
Screw type	worm
Internally restrained	yes
Manual override	no
Dynamic braking with option CN with option NP, FN, FP	 yes no
Holding brake	no (self locking)
End of stroke protection	yes
Mid stroke protection	yes
Motor protection with temperature rating S with temperature rating E	 auto reset thermal switch no
Motor connection	flying leads or Deutsch connector
Certificates	CE, RoHS
Options	• extended temperature range • adapter orientation • right angle cable exit • analog position feedback sensor • internal end of stroke limit switches • CanBus SAE J1939

Performance Specifications

Parameter		Electrak Throttle
Maximum load, dynamic / static ET••-084 (1) ET••-174	[N]	 45 / 90 130 / 260
Speed, no load / at max. load ET••-084 (1) ET••-174	[mm/s]	 96 / 83 48 / 37
Available input voltages	[VDC]	12, 24
Current draw, max. (2) 12 VDC models 24 VDC models	[A]	 4 2
Operating temperature, min	[°C]	- 40
Operating temperature, max ET••-•••-•S ET••-•••-•E	[°C]	 85 125
Full load duty cycle @ 25 °C (3)	[%]	50
End play, maximum	[mm]	1.5
Restraining torque	[Nm]	0
Motor cable lead cross section	[mm^2]	0.8
Motor cable length	[mm]	165
Protection class		IP69K, IP67
Operational life	[cycles]	500000
Retracted length	[mm]	184.7
Stroke length	[mm]	50.8
Weight	[kg]	1.11
Analog feedback sensor linearity	[± %]	1

(1) The ET• • -084 (high speed version) can only be ordered in combination with operating temperature rating E.
(2) Max. current draw ratings do not include motor inrush current. Typical inrush current values are 12 A at 12 VDC and 6 A at 24 VDC.
(3) For all models and load ranges.

Compatible Controls

Control model	See page
DPDT switch (4)	61

(4) The DPDT switch cannot be used in combination with CanBus.

Electrak® Throttle

12 and 24 Vdc - load up to 130 N

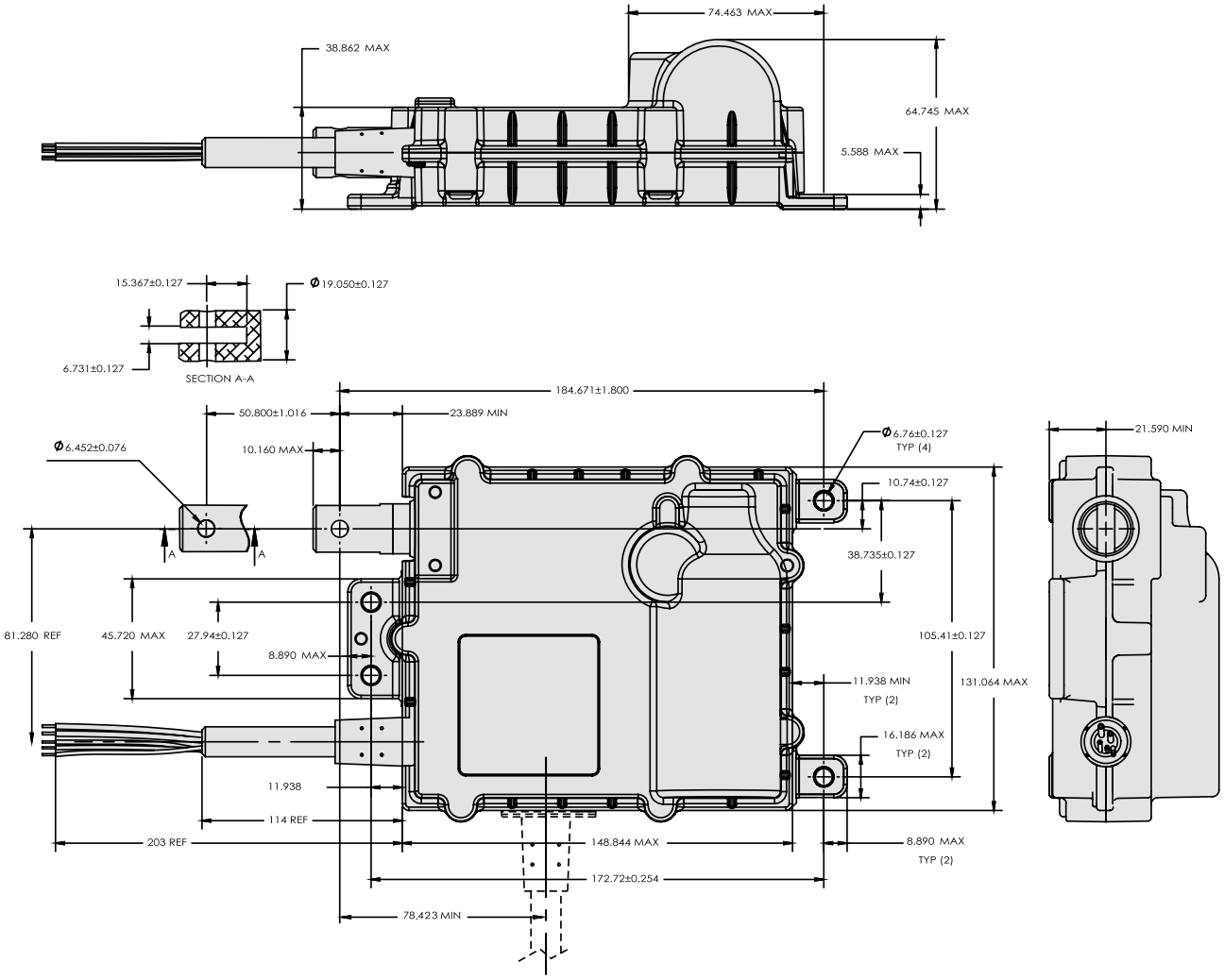

Performance Diagrams

ET••-084

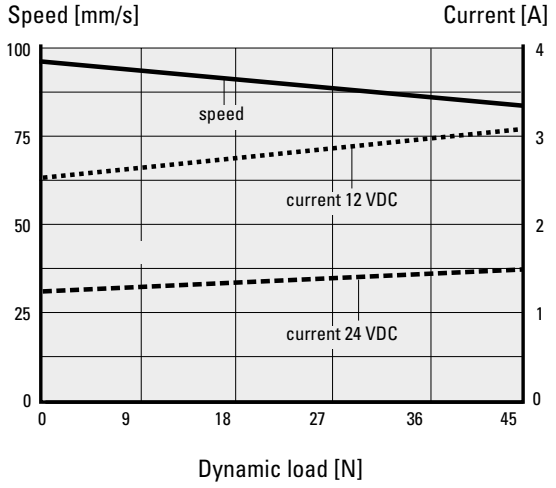

ET••-174

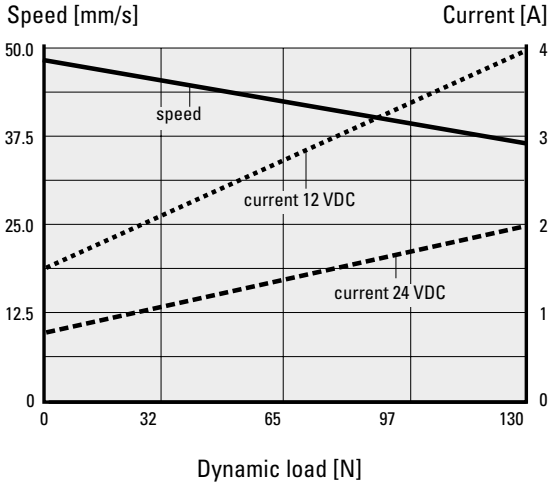

Max Jac

12 and 24 Vdc - load up to 800 N

» Ordering Key - see page 80
» Glossary - see page 85

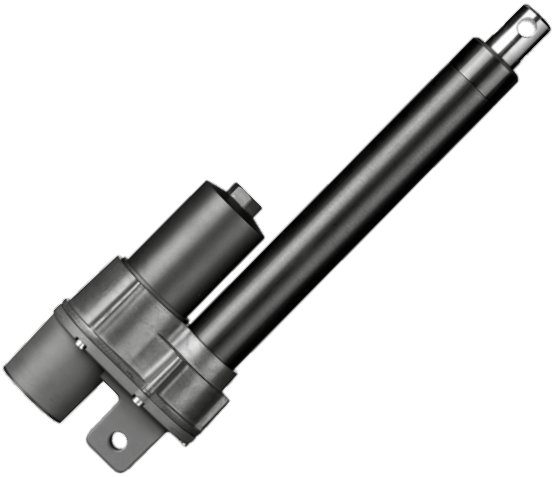

Standard Features and Benefits

- Designed for industrial applications
- Rugged aluminum housing with IP69K
- High efficiency
- Long life
- Hard coat anodizing for high corrosion resistance
- Virtually maintenance free
- Worm or ball screw models
- Non contact analog position feedback signal

General Specifications

Parameter	Max Jac
Screw type	worm or ball
Internally restrained	no
Manual override	no
Dynamic braking	no
Self locking worm screw models ball screw models	 yes no
End of stroke protection	no
Mid stroke protection	no
Motor protection	no
Motor connection	flying leads or cable with connector
Motor connector	AMP Superseal Series 1,5
Certificates	CE
Options	Encoder position feedback

Performance Specifications

Parameter		Max Jac
Maximum load, dynamic / static MX • • W (worm screw) MX • • B (ball screw)	[N]	 500 / 2000 800 / 100 - 350 (1)
Speed, at no load / at maximum load MX • • W (worm screw) MX • • B (ball screw)	[mm/s]	 33 / 19 60 / 30
Available input voltages	[VDC]	12, 24
Standard stroke lengths	[mm]	50,100,150 200, 250 (2), 300 (2)
Operating temperature limits	[°C]	-40 to +85
Full load duty cycle @ 25 °C	[%]	25
End play, maximum	[mm]	0,3
Restraining torque	[Nm]	2
Lead cross section	[mm²]	1
Standard cable lengths	[mm]	300, 1600
Protection class		IP66/IP69K
Salt spray resistance	[h]	500
Life	[cycles]	500000 (3)
Analog position feedback signal	[VDC]	0,5 - 4,5
Encoder position feedback option Supply voltage Pulses per mm, worm / ball screw Channels	[VDC]	 5 9,86 / 5,84 A, B

(1) The static force (i.e. the backdriving force) for a ball screw unit varies and is dependant on the number of cycles it have been running and at wich loads.
(2) Strokes possible for ball screw models only.
(3) For ball screw actuator with 100 mm stroke, average load of 500 N and changing load direction.

Duty Cycle vs. Load

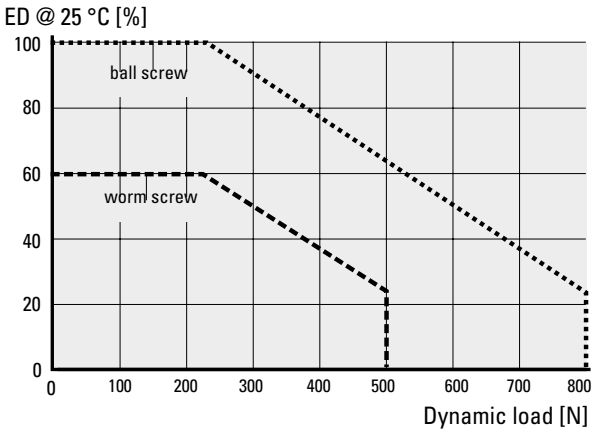

Max Jac

12 and 24 Vdc - load up to 800 N

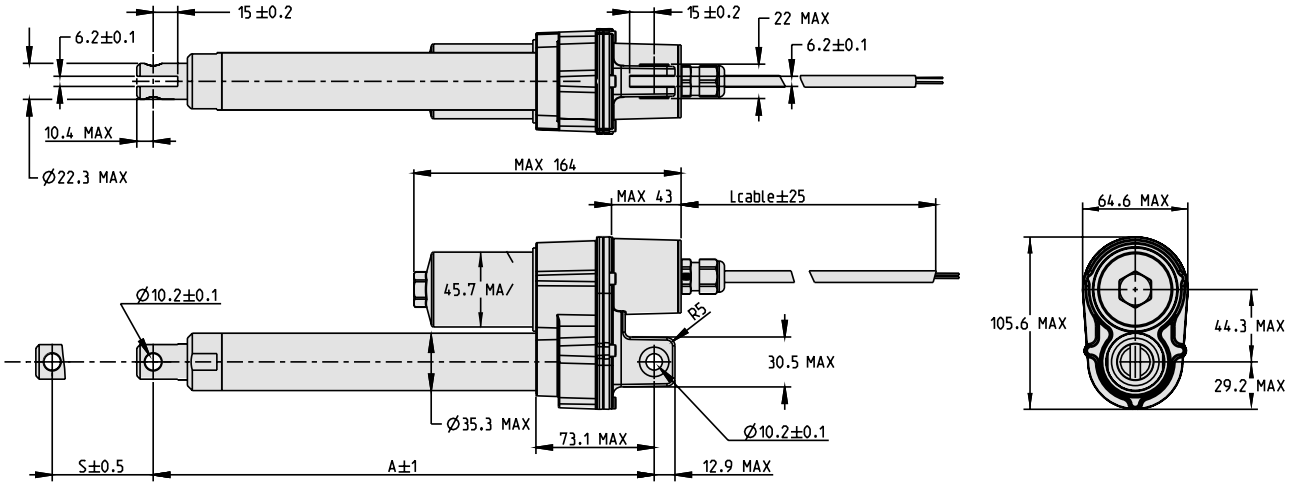

Stroke (S)	[mm]	50	100	150	200	250 *	300 *
Retracted length (A)	[mm]	206	256	306	356	406	456
Weight	[kg]	1,5	1,7	1,9	2,1	2,2	2,4

* Strokes possible for ball screw models only.

Performance Diagrams

Worm Screw Models (MX • • W)

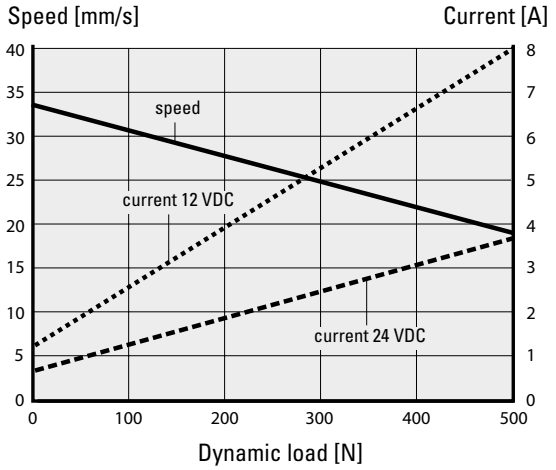

Ball Screw Models (MX • • B)

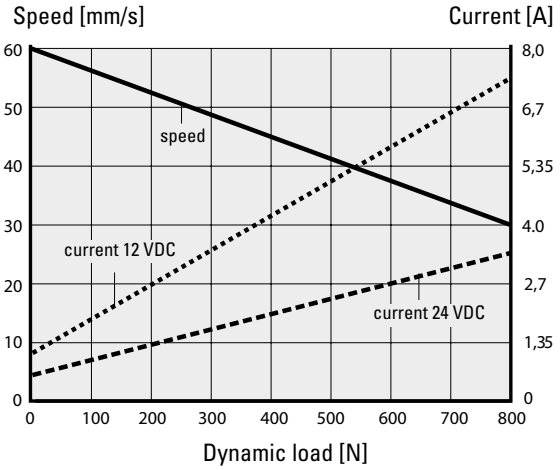

Lifting Column LC1600

24 Vdc - load up to 1600 N

» Ordering Key - see page 81
» Glossary - see page 85
» Electric Wiring Diagram - see page 57

Standard Features and Benefits

- For medical and ergonomic automation applications
- Self supporting column in extruded anodized aluminum
- Low weight and extremily quiet operation
- Thomson Whispertrak™ drive technology
- High load torque capability
- Maintenance free
- Dynamic braking and load holding brake
- Electronic limit switches and mid-stroke protection

General Specifications

Parameter	LC1600
Screw type	trapezoidal
Internally restrained	yes
Manual override	no
Dynamic braking	yes
Holding brake	yes
End of stroke protection	electronic limit switches (ELS)
Mid stroke protection	yes
Motor protection	no
Motor connection	cable
Motor connector LX version NX and NE versions	 flying leads Molex 8 pin plug
Certificates	CE
Options	ELS encoder position feedback

Performance Specifications

Parameter		LC1600
Maximum load	[N]	1600
Maximum load torque, dynamic / static	[Nm]	200 / 500
Speed, at no load / at maximum load	[mm/s]	11 / 6.5
Available input voltages	[Vdc]	24
Standard stroke lengths (S)	[mm]	200, 250, 300, 350, 400
Operating temperature limits	[°C]	0 to +40
Full load duty cycle @ 20 °C	[%]	10
Maximum on time	[s]	60
Maximum sound level	[dB]	45
Lead cross section	[mm²]	1.5
Standard cable length LX version NX and NE versions	[mm]	 900 1900
Protection class		IP44

Compatible Controls

Control model	See page
DCG-154 for operation of single unit	66
DCG-254 for synchronous operation of two units	66

Performance Diagrams

Speed and Current vs. Load

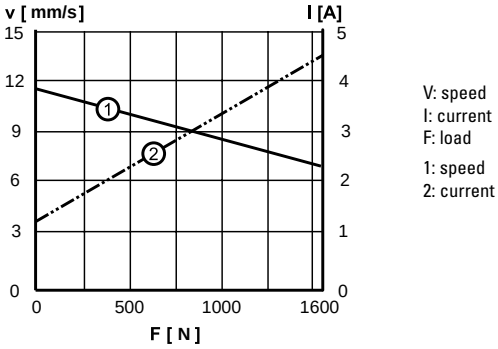

Lifting Column LC1600

24 Vdc - load up to 1600 N

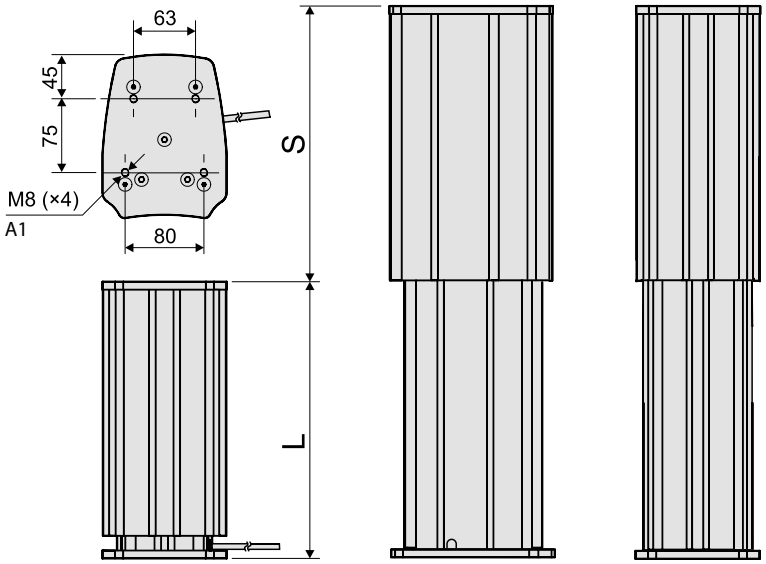

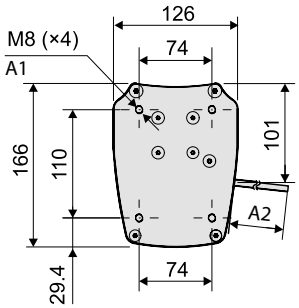

S: stroke
L: retracted length
A1: mounting screws must not enter deeper than 10 mm.
A2: LX version cable length = 900 mm, NX and NE versions = 1900 mm.

Stroke, retracted length and weight relationship						
Ordering stroke (S)	[mm]	200	250	300	350	400
Minimum retracted length (L min)	[mm]	380	430	480	581	631
Weight of unit	[kg]	9.1	9.8	10.5	11.8	12.4

The desired ordering stroke (S) will determine the minimum retracted length (L min) and the weight of the unit. The table provides the corresponding minimum retracted length (L min) and weight values to each of the available standard stroke lengths (S).

Lifting Column LC2000

24 Vdc - load up to 2000 N

» Ordering Key - see page 81
» Glossary - see page 85
» Electric Wiring Diagram - see page 57

Standard Features and Benefits

- For medical and ergonomic automation applications
- Self supporting column in extruded anodized aluminum
- Low weight and quiet operation
- Smooth operating telescopic lead screw drive
- High load torque capability
- Very short retracted length
- High extension to retraction ratio
- Maintenance free
- Load holding brake
- Integrated end of stroke limit switches
- EMC recognized for medical applications

General Specifications

Parameter	LC2000
Screw type	telescopic lead screw
Internally restrained	yes
Manual override	no
Dynamic braking	no (1)
Holding brake	yes
End of stroke protection	end of stroke limit switches
Mid stroke protection	no (1)
Motor protection	no (1)
Motor connection	cable
Motor connector	Molex 8 pin plug
Certificates	CE EMC for medical applications (2)
Options	encoder position feedback

(1) Dynamic braking, mid-stroke protection, and motor protection are provided when used with DCG control.
(2) Emission: EN 61000-6-3:2001, EN 60601-1-2:1993, EN 55011 Class B
Immunity: EN 61000-6-2:2001, EN 61000-4-2, EN 61000-4-3

Performance Specifications

Parameter		LC2000
Maximum load	[N]	2000
Maximum load torque, dynamic / static	[Nm]	150* / 500
Speed, at no load / at maximum load	[mm/s]	19 / 15
Available input voltages	[Vdc]	24
Minimum ordering stroke (S)	[mm]	200
Maximum ordering stroke (S)	[mm]	600
Operating temperature limits	[°C]	0 to +40
Full load duty cycle @ 20 °C	[%]	15
Maximum on time	[s]	60
Lead cross section	[mm²]	1.5
Standard cable length	[mm]	2000
Protection class		IP44

* Higher dynamic loads up to 400 Nm available upon request, contact customer support.

Compatible Controls

Control model	See page
DCG-180 for operation of single unit	66
DCG-280 for synchronous operation of two units	66

Performance Diagrams

Speed and Current vs. Load

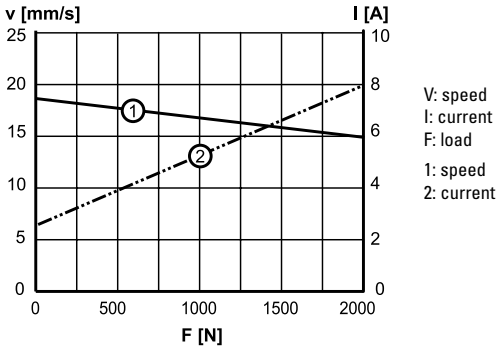

Lifting Column LC2000

24 Vdc - load up to 2000 N

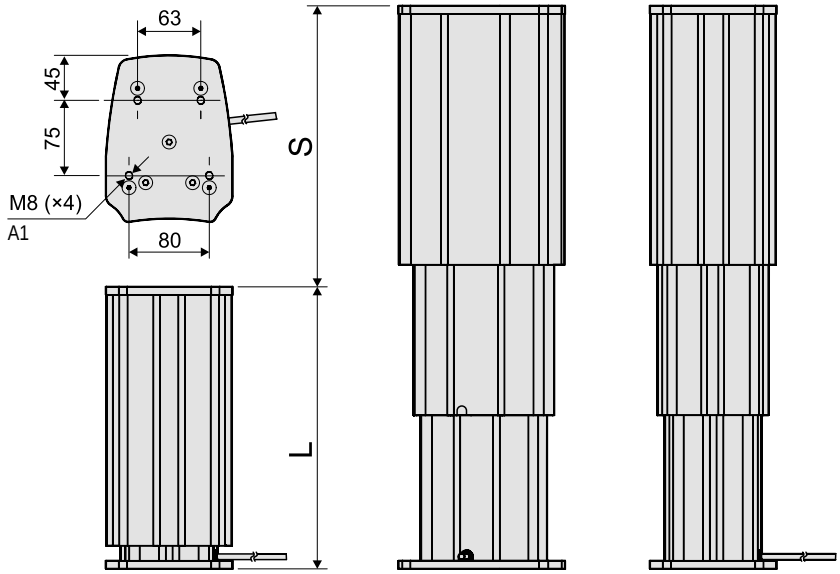

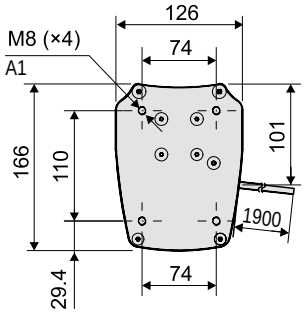

S: stroke
L: retracted length
A1: mounting screws must not enter deeper than 10 mm.

Stroke, retracted length and weight relationship			
		Minimum	Maximum
Stroke (S)	[mm]	200	600
Retracted length (L)	[mm]	250 or L min	441
Min. retracted length (L min) based on stroke (S)	[mm]	L min = (S + 282) / 2	
Weight of unit based on stroke (S)	[kg]	Weight = 3.4 + L [mm] × 0.0203 + S [mm] × 0.001	

The desired stroke (S) will determine the minimum retracted length (L min) and the weight of the unit. Units can be built with a retracted length (L) between the calculated L min value and maximum retracted length.

Examples of strokes and the resulting minimum retracted length (L min) and weight										
Stroke (S)	[mm]	200	250	300	350	400	450	500	550	600
Minimum retracted length (L min)	[mm]	250	266	291	316	341	366	391	416	441
Weight	[kg]	8.7	9.1	9.7	10.2	10.8	11.3	11.9	12.4	13

Lifting Column LC3000

24 Vdc - load up to 3000 N

» Ordering Key - see page 81
» Glossary - see page 85
» Electric Wiring Diagram - see page 57

Standard Features and Benefits

- For medical and ergonomic automation applications
- Self supporting column in extruded anodized aluminum
- Low weight and quiet operation
- Smooth operating ball screw drive
- High load torque capability
- Short retracted length
- Maintenance free
- Load holding brake
- Integrated end of stroke limit switches

General Specifications

Parameter	LC3000
Screw type	ball screw
Internally restrained	yes
Manual override	no
Dynamic braking	no (1)
Holding brake	yes
End of stroke protection	end of stroke limit switches
Mid stroke protection	no (1)
Motor protection	no (1)
Motor connection	cable
Motor connector	Molex 8 pin plug
Certificates	CE
Options	encoder position feedback

(1) Dynamic braking, mid-stroke protection, and motor protection are provided when used with DCG control.

Performance Specifications

Parameter		LC3000
Maximum load	[N]	3000
Maximum load torque, dynamic / static	[Nm]	400 / 500
Speed, at no load / at maximum load	[mm/s]	8 / 6
Available input voltages	[Vdc]	24
Minimum ordering stroke (S)	[mm]	200
Maximum ordering stroke (S)	[mm]	400
Operating temperature limits	[°C]	0 to +40
Full load duty cycle @ 20 °C	[%]	10
Maximum on time	[s]	60
Lead cross section	[mm²]	1.5
Standard cable length	[mm]	1900
Protection class		IP44

Compatible Controls

Control model	See page
DCG-180 for operation of single unit	66
DCG-280 for synchronous operation of two units	66

Performance Diagrams

Speed and Current vs. Load

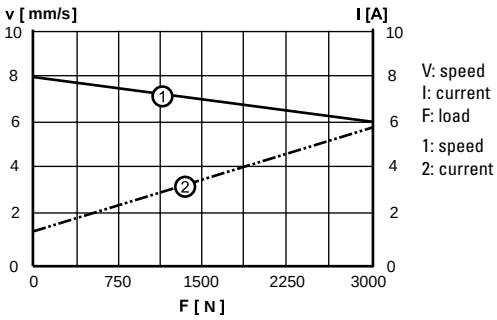

Lifting Column LC3000

24 Vdc - load up to 3000 N

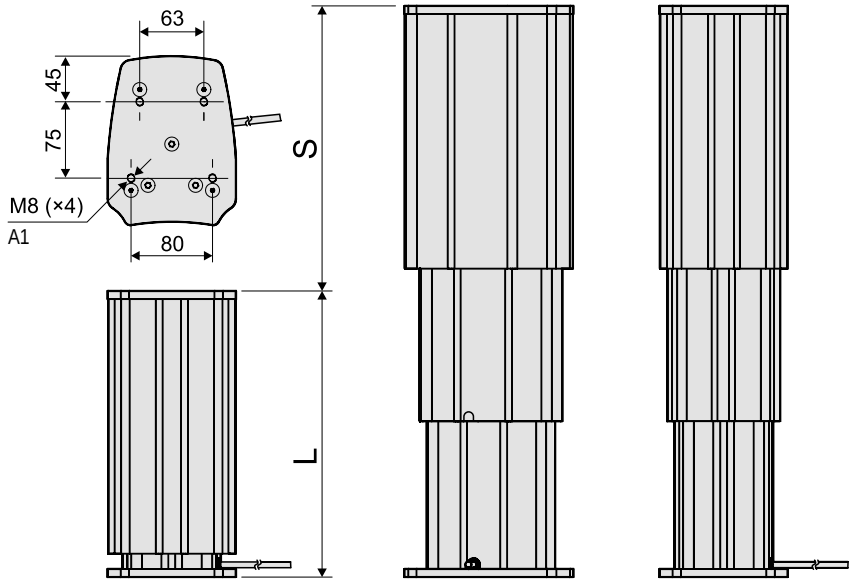

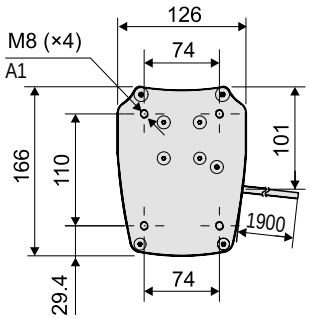

S: stroke
L: retracted length
A1: mounting screws must not enter deeper than 10 mm.

Stroke, retracted length and weight relationship			
		Minimum	Maximum
Stroke (S)	[mm]	200	400
Retracted length (L)	[mm]	330 or L min	530
Min. retracted length (L min) based on stroke (S)	[mm]	L min = S + 130	
Weight of unit based on stroke (S)	[kg]	Weight = 4.065 + ((0.01774 × L [mm]) - 0.6031) + (S [mm] + 70) × 0.0012)	

The desired stroke (S) will determine the minimum retracted length (L min) and the weight of the unit. Units can be built with a retracted length (L) between the calculated L min value and maximum retracted length.

Examples of strokes and the resulting minimum retracted length (L min) and weight						
Stroke (S)	[mm]	200	250	300	350	400
Minimum retracted length (L min)	[mm]	330	380	430	480	530
Weight	[kg]	9.7	10.6	11.6	12.5	13.5

Lifting Column DMD

12, 24 and 36 Vdc - load up to 6800 N

» Ordering Key - see page 81
» Glossary - see page 85
» Electric Wiring Diagram - see page 56

Standard Features and Benefits

- Designed for industrial use
- Rugged, robust and strong
- Self supporting column in extruded anodized aluminum
- Acme or ball screw drive
- High load torque capability
- Overload clutch for mid and end of stroke protection
- T-slot grooves along the entire profile
- Maintenance free

General Specifications

Parameter	DMD
Screw type	acme or ball
Internally restrained	yes
Manual override	no
Dynamic braking	no
Holding brake acme screw models ball screw models	 no, self-locking yes
End of stroke protection	overload clutch
Mid stroke protection	overload clutch
Motor protection	auto reset thermal switch
Motor connection	cable
Motor connector	no
Certificates	CE
Options	potentiometer*

* For encoder feedback, contact customer support.

Performance Specifications

Parameter		DMD
Maximum load, dynamic / static	[N]	
DMD • • -05A5 (acme screw)		1100 / 11350
DMD • • -10A5 (acme screw)		2250 / 11350
DMD • • -20A5 (acme screw)		2250 / 11350
DMD • • -05B5 (ball screw)		2250 / 18000
DMD • • -10B5 (ball screw)		4500 / 18000
DMD • • -20B5 (ball screw)		4500 / 18000
DMD • • -21B5 (ball screw)		6800 / 18000
Maximum load torque, dynamic / static	[Nm]	
acme screw models		565 / 565
ball screw models		710 / 710
Speed, at no load / at maximum load	[mm/s]	
DMD • • -05A5 (acme screw)		54 / 32
DMD • • -10A5 (acme screw)		30 / 18
DMD • • -20A5 (acme screw)		15 / 12
DMD • • -05B5 (ball screw)		61 / 37
DMD • • -10B5 (ball screw)		30 / 19
DMD • • -20B5 (ball screw)		15 / 12
DMD • • -21B5 (ball screw)		15 / 11
Available input voltages	[Vdc]	12, 24, 36
Standard stroke lengths	[in]	4, 6, 8, 10, 12, 14, 16, 18, 20, 24
Operating temperature limits	[°C]	-25 – +65
Full load duty cycle @ 25 °C	[%]	25
End play, maximum	[mm]	1,0
Restraining torque	[Nm]	0
Lead cross section	[mm^2]	2,5
Cable length	[mm]	2000
Protection class		IP65

Compatible Controls

Control model	See page
DPDT switch	61
AC-063	62

Lifting Column DMD

12, 24 and 36 Vdc - load up to 6800 N

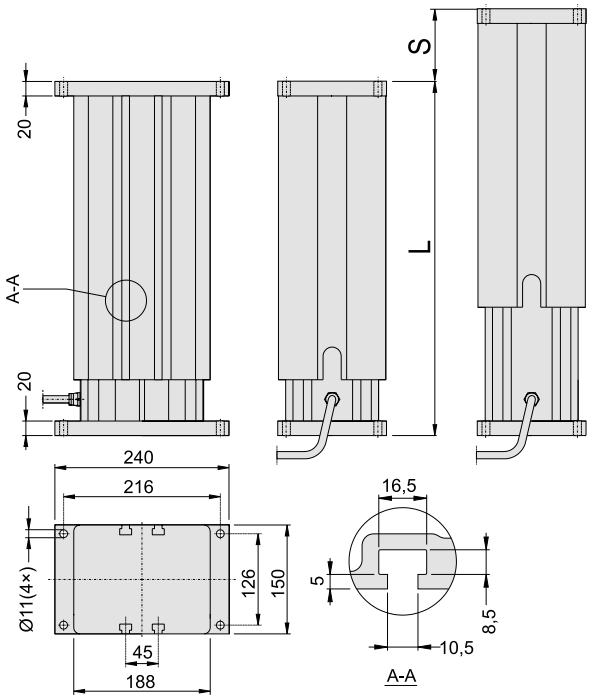

S: stroke L: retracted length

Off Center Load Capacity

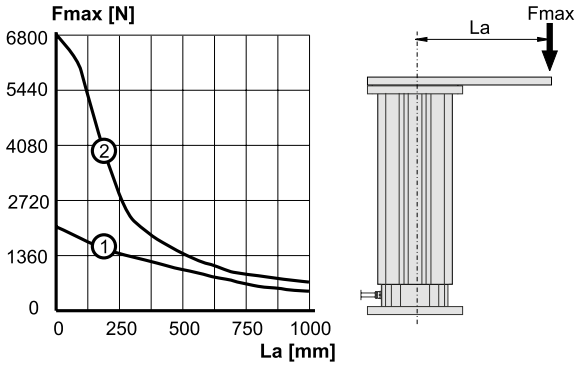

Fmax: maximum load operated La: length of lever arm

1: acme screw models
2: ball screw models

Stroke (S)	[inch (mm)]	4 (101,6)	6 (152,4)	8 (203,2)	10 (254,0)	12 (304,8)	14 (355,6)	16 (406,4)	18 (457,2)	20 (508,0)	24 (609,6)
Retracted length (L), acme screw models	[mm]	329,6	380,4	431,2	482,0	532,8	633,6	684,4	735,2	786,0	887,6
Retracted length (L), ball screw models	[mm]	369,6	420,4	471,2	522,0	572,8	673,6	724,4	775,2	826,0	927,6
Add on length for potentiometer*	[mm]	55,0	55,0	55,0	55,0	55,0	55,0	55,0	55,0	55,0	55,0
Weight, acme screw models	[kg]	18,7	20,2	21,6	23,1	24,6	27,3	28,7	30,2	31,7	34,6
Weight, ball screw models	[kg]	20,4	21,9	23,4	24,8	26,3	29,0	30,4	31,9	33,4	36,3
Add on weight for potentiometer*	[kg]	1,3	1,3	1,3	1,3	1,3	1,3	1,3	1,3	1,3	1,3

* Potentiometer is optional

Performance Diagrams

Speed and Current vs. Load - Chart 1

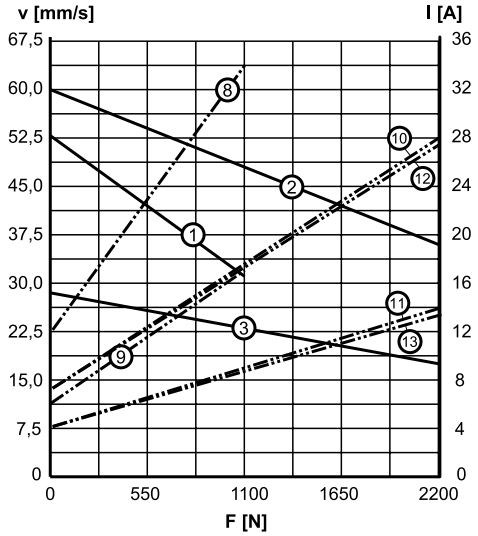

Speed and Current vs. Load - Chart 2

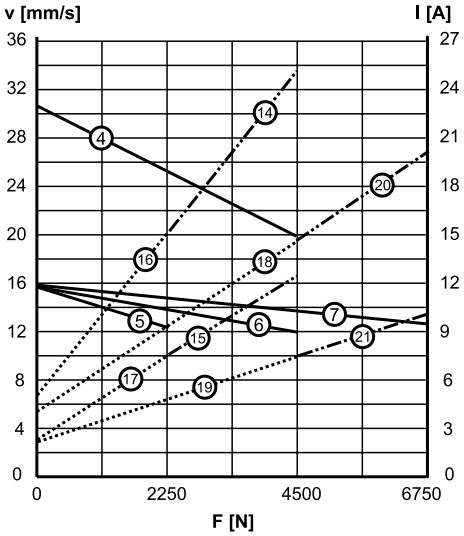

V: speed I: current F: load

1: speed DMD • • -05A5 - chart 1
2: speed DMD • • -05B5 - chart 1
3: speed DMD • • -10A5 - chart 1
4: speed DMD • • -10B5 - chart 2
5: speed DMD • • -20A5 - chart 2
6: speed DMD • • -20B5 - chart 2
7: speed DMD • • -21B5 - chart 2
8: current DMD12-05A5 - chart 1
9: current DMD24-05A5 - chart 1
10: current DMD12-05B5 - chart 1
11: current DMD24-05B5 - chart 1
12: current DMD12-10A5 - chart 1
13: current DMD24-10A5 - chart 1
14: current DMD12-10B5 - chart 2
15: current DMD24-10B5 - chart 2
16: current DMD12-20A5 - chart 2
17: current DMD24-20A5 - chart 2
18: current DMD12-20B5 - chart 2
19: current DMD24-20B5 - chart 2
20: current DMD12-21B5 - chart 2
21: current DMD24-21B5 - chart 2

Contact customer service for data on 36 Vdc models.

Lifting Column DMA

230 and 400 Vac - load up to 6800 N

» Ordering Key - see page 81
» Glossary - see page 85
» Electric Wiring Diagram - see page 58

Standard Features and Benefits

- Designed for industrial use
- Rugged, robust and strong
- Self supporting column in extruded anodized aluminum
- Acme or ball screw drive
- High load torque capability
- Overload clutch for mid and end of stroke protection
- T-slot grooves along the entire profile
- Maintenance free

General Specifications

Parameter	DMA
Screw type	acme or ball
Internally restrained	yes
Manual override	no
Dynamic braking	no
Holding brake acme screw models ball screw models	 no, self-locking yes
End of stroke protection	overload clutch
Mid stroke protection	overload clutch
Motor protection	auto reset thermal switch
Motor connection	cable
Motor connector	no
Certificates	CE
Options	potentiometer

Performance Specifications

Parameter		DMA
Maximum load, dynamic / static	[N]	
DMA22-05A5 (acme screw)*		1100 / 11350
DMA • • -10A5 (acme screw)		2250 / 11350
DMA • • -20A5 (acme screw)		2250 / 11350
DMA • • -05B5 (ball screw)		2250 / 18000
DMA • • -10B5 (ball screw)		4500 / 18000
DMA • • -20B5 (ball screw)		4500 / 18000
DMA • • -21B5 (ball screw)		6800 / 18000
Maximum load torque, dynamic / static	[Nm]	
acme screw models		565 / 565
ball screw models		710 / 710
Speed, at no load / at maximum load	[mm/s]	
DMA22-05A5 (acme screw)*		48 / 38
DMA • • -10A5 (acme screw)		30 / 18
DMA • • -20A5 (acme screw)		15 / 12
DMA • • -05B5 (ball screw)		61 / 37
DMA • • -10B5 (ball screw)		30 / 19
DMA • • -20B5 (ball screw)		15 / 12
DMA • • -21B5 (ball screw)		15 / 11
Available input voltages	[Vac]	
Single phase**		230
Three phase		400
Input frequency	[Hz]	
1 × 230 Vac model		50/60
3 × 400 Vac model		50
Standard stroke lengths	[in]	4, 6, 8, 10, 12, 14, 16, 18, 20, 24
Operating temperature limits	[°C]	-25 – +65
Maximum on time	[s]	45
Full load duty cycle @ 25 °C	[%]	25
End play, maximum	[mm]	1,0
Restraining torque	[Nm]	0
Lead cross section	[mm²]	2,5
Cable length	[mm]	2000
Protection class		IP45

* Not possible with 400 Vac input voltage
** 10 µF capacitor required to run the actuator, p/n 9200-448-003

Compatible Controls

Control model	See page
DPDT switch	61

Lifting Column DMA

230 and 400 Vac - load up to 6800 N

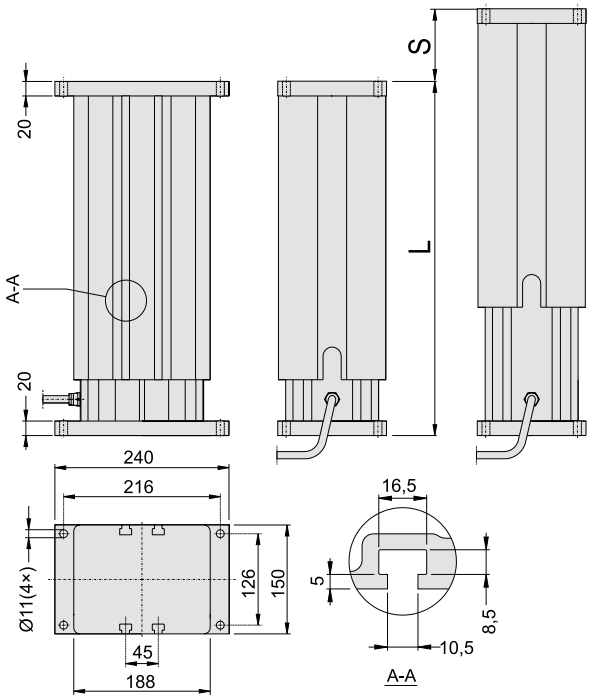

S: stroke L: retracted length

Off Center Load Capacity

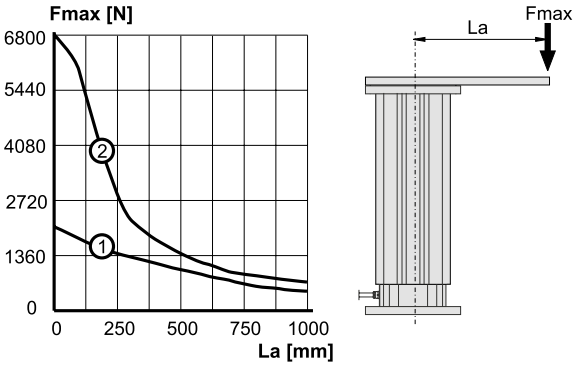

Fmax: maximum load operated La: length of lever arm

1: acme screw models
2: ball screw models

Stroke (S)	[inch (mm)]	4 (101,6)	6 (152,4)	8 (203,2)	10 (254,0)	12 (304,8)	14 (355,6)	16 (406,4)	18 (457,2)	20 (508,0)	24 (609,6)
Retracted length (L), acme screw models	[mm]	329,6	380,4	431,2	482,0	532,8	633,6	684,4	735,2	786,0	887,6
Retracted length (L), ball screw models	[mm]	369,6	420,4	471,2	522,0	572,8	673,6	724,4	775,2	826,0	927,6
Add on length for potentiometer*	[mm]	55,0	55,0	55,0	55,0	55,0	55,0	55,0	55,0	55,0	55,0
Weight, acme screw models	[kg]	20,9	22,4	23,8	25,3	26,8	29,5	30,9	32,4	33,9	36,8
Weight, ball screw models	[kg]	22,6	24,1	25,6	27,0	28,5	31,2	32,6	34,1	35,6	38,6
Add on weight for potentiometer*	[kg]	1,3	1,3	1,3	1,3	1,3	1,3	1,3	1,3	1,3	1,3

* Potentiometer is optional

Performance Diagrams

Speed and Current vs. Load - Chart 1

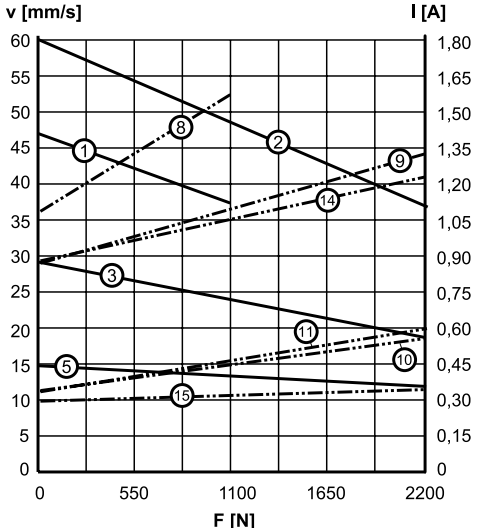

Speed and Current vs. Load - Chart 2

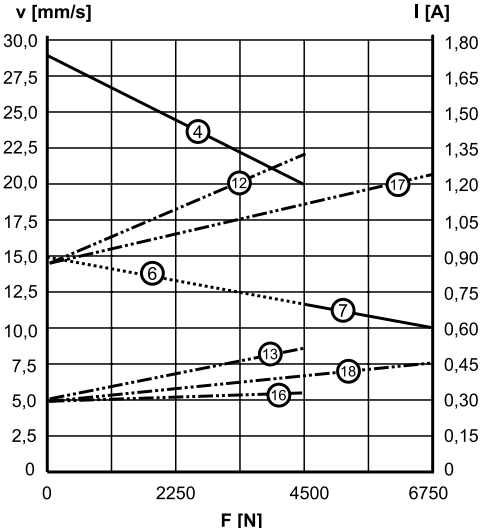

V: speed I: current F: load

1: speed DMA22-05A5 - chart 1
2: speed DMA • • -05B5 - chart 1
3: speed DMA • • -10A5 - chart 1
4: speed DMA • • -10B5 - chart 2
5: speed DMA • • -20A5 - chart 1
6: speed DMA • • -20B5 - chart 2
7: speed DMA • • -21B5 - chart 2
8: current DMA22-05A5 - chart 1
9: current DMA22-05B5 and DMA22-10A5 - chart 1
10: current DMA42-05B5 - chart 1
11: current DMA42-10A5 - chart 1
12: current DMA22-10B5 and DMA22-20B5 - chart 2
13: current DMA42-10B5 - chart 2
14: current DMA22-20A5 - chart 1
15: current DMA42-20A5 - chart 1
16: current DMA42-20B5 - chart 2
17: current DMA22-21B5 - chart 2
18: current DMA42-21B5 - chart 2

Rodless Actuator LM80-H

12 and 24 Vdc - load up to 2000 N

» Ordering Key - see page 82
» Glossary - see page 85
» Electric Wiring Diagram - see page 57

Standard Features and Benefits

- Rodless actuator for horizontal operation
- For use in domestic, office or medical applications
- Rigid self supporting extruded aluminum profile
- Durable and corrosion free
- Lightweight and quiet operation
- Safety nut on ball screw versions
- Easy and fast T-slot mounting
- Maintenance free

General Specifications

Parameter	LM80-H
Screw type	trapezoidal or ball
Internally restrained	yes
Manual override	no
Dynamic braking	no
Holding brake	no
End of stroke protection	spring loaded soft stop
Mid stroke protection	no
Motor protection	no
Motor connection with motor enclosure no motor enclosure	 cable no cable, clips on motor
Motor connector with motor enclosure no motor enclosure	 8-pole Molex mini-fit jr clips on motor
Certificates	CE
Options	• no motor enclosure • manual override • alternative motor positions • stroke over 1500 mm* • encoder *

* Contact customer support

Performance Specifications

Parameter		LM80-H
Maximum load (Fb)	[N]	2000
Maximum load torque (Mb) DT•• -T68M ••••• H DT•• -B61M ••••• H DT•• -B62M ••••• H DT•• -B65M ••••• H	[Nm]	 250 400 180 750
Speed, at no load / at maximum load DT•• -T68M ••••• H DT•• -B61M ••••• H DT12 -B62M ••••• H DT24 -B62M ••••• H DT•• -B65M ••••• H	[mm/s]	 44 / 37 55 / 50 110 / 73 110 / 87 28 / 28
Available input voltages	[Vdc]	12, 24
Standard stroke lengths	[mm]	500, 600, 700, 800, 900, 1000, 1100, 1200, 1300, 1400, 1500
Operating temperature limits	[°C]	0 – +40
Full load duty cycle @ 20 °C	[%]	15
Maximum on time	[s]	120
End play, maximum	[mm]	1,0
Restraining torque	[Nm]	0
Lead cross section with / without motor enclosure	[mm²]	 1,5 / –
Cable length with / without motor enclosure	[mm]	 2000 / –
Protection class with / without motor enclosure		 IP44 / IP33

Compatible Controls

Control model	See page
DPDT switch	61
DCG-170	66
AC-247 ELS	64

Rodless Actuator LM80-H

12 and 24 Vdc - load up to 2000 N

! Note: this unit may only be mounted horizontaly.

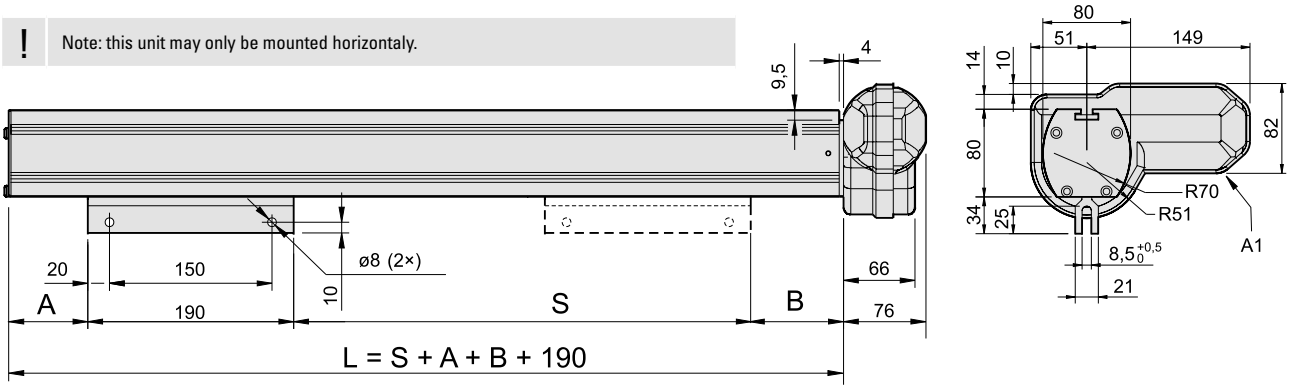

S: stroke
L: length of profile
A1: motor shown in position A (standard position)

Stroke (S)	[mm]	500	600	700	800	900	1000	1100	1200	1300	1400	1500
Dimensions (A) / (B)	[mm]											
DT•• -T68M ••••• H							54,0 / 77,0					
DT•• -B61M ••••• H							102,0 / 77,0					
DT•• -B62M ••••• H							102,0 / 77,0					
DT•• -B65M ••••• H							79,0 / 77,0					
Weight	[kg]											
DT•• -T68M ••••• H		11,2	13,1	14,8	16,6	18,1	20,2	22,0	23,8	25,5	27,4	29,1
DT•• -B61M ••••• H		12,1	13,9	15,7	17,5	19,3	21,0	22,9	24,6	26,3	28,2	30,0
DT•• -B62M ••••• H		12,1	13,9	15,7	17,5	19,3	21,0	22,9	24,6	26,3	28,2	30,0
DT•• -B65M ••••• H		11,7	13,5	15,3	17,1	18,9	20,6	22,4	24,2	26,0	27,8	29,6

Performance Diagrams

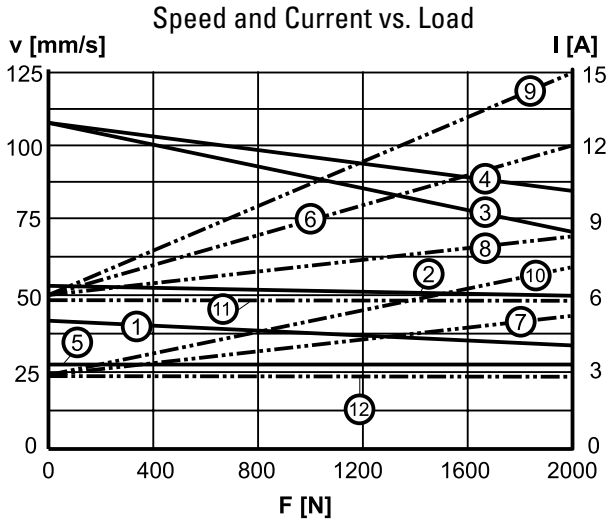

V: speed I: current F: load

1: speed DT •• -T68M ••••• H
2: speed DT •• -B61M ••••• H
3: speed DT12-B62M ••••• H
4: speed DT24-B62M ••••• H
5: speed DT •• -B65M ••••• H
6: current DT12-T68M ••••• H
7: current DT24-T68M ••••• H and DT24-B61M ••••• H
8: current DT12-B61M ••••• H
9: current DT12-B62M ••••• H
10: current DT24-B62M ••••• H
11: current DT12-B65M ••••• H
12: current DT24-B65M ••••• H

Definition of Forces

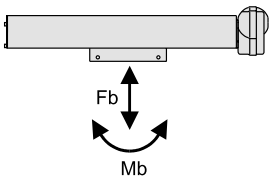

Deflection of Profile

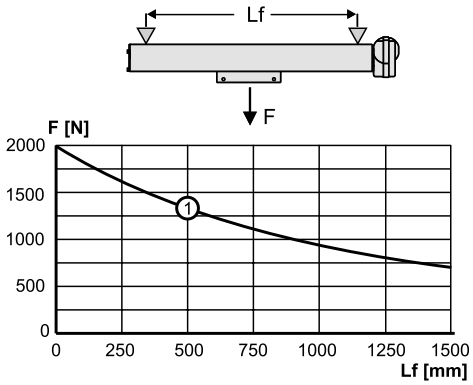

F: load Lf: distance between mounting points

1: maximum allowed deflection

Rodless Actuator LM80-V

12 and 24 Vdc - load up to 2000 N

» Ordering Key - see page 82
» Glossary - see page 85
» Electric Wiring Diagram - see page 57

Standard Features and Benefits

- Rodless actuator for vertical operation with motor down
- For use in domestic, office or medical applications
- Rigid self supporting extruded aluminum profile
- Durable and corrosion free
- Holding brake prevents downward motion at power off
- Lightweight and quiet operation
- Safety nut on ball screw versions
- Easy and fast T-slot mounting
- Optional spline safety function
- Maintenance free

General Specifications

Parameter	LM80-V
Screw type	trapezoidal or ball
Internally restrained	yes
Manual override	no
Dynamic braking	no
Holding brake	yes
End of stroke protection	spring loaded soft stop
Mid stroke protection	no
Motor protection	no
Motor connection with motor enclosure no motor enclosure	 cable no cable, clips on motor
Motor connector with motor enclosure no motor enclosure	 8-pole Molex mini-fit jr clips on motor
Certificates	CE
Options	• no motor enclosure • manual override • alternative motor positions • spline safety function • stroke over 1500 mm* • encoder *

* Contact customer support

Performance Specifications

Parameter		LM80-V
Maximum load (Fa)	[N]	
DT•• -T68M ••••• V(F)		650
DT•• -B61M ••••• V(F)		1000
DT•• -B62M ••••• V(F)		450
DT•• -B65M ••••• V(F)		2000
Maximum load torque (Ma)	[Nm]	
DT•• -T68M ••••• V(F)		250
DT•• -B61M ••••• V(F)		400
DT•• -B62M ••••• V(F)		180
DT•• -B65M ••••• V(F)		750
Speed, at no load / at maximum load	[mm/s]	
DT12 -T68M ••••• V(F)		44 / 29
DT24 -T68M ••••• V(F)		44 / 35
DT12 -B61M ••••• V(F)		55 / 37
DT24 -B61M ••••• V(F)		55 / 43
DT12 -B62M ••••• V(F)		110 / 67
DT24 -B62M ••••• V(F)		110 / 83
DT12 -B65M ••••• V(F)		28 / 19
DT24 -B65M ••••• V(F)		28 / 22
Available input voltages	[Vdc]	12, 24
Standard stroke lengths	[mm]	500, 600, 700, 800, 900, 1000, 1100, 1200, 1300, 1400, 1500
Operating temperature limits	[°C]	0 – +40
Full load duty cycle @ 20 °C	[%]	15
Maximum on time	[s]	120
Restraining torque	[Nm]	0
Lead cross section with / without motor enclosure	[mm²]	 1,5 / –
Cable length with / without motor enclosure	[mm]	 2000 / –
Protection class with / without motor enclosure		 IP44 / IP33

Compatible Controls

Control model	See page
DPDT switch	61
DCG-160	66
AC-247 ELS	64

Rodless Actuator LM80-V

12 and 24 Vdc - load up to 2000 N

! Note: this unit may only be mounted vertically with the motor down even if drawing shows it horizontaly.

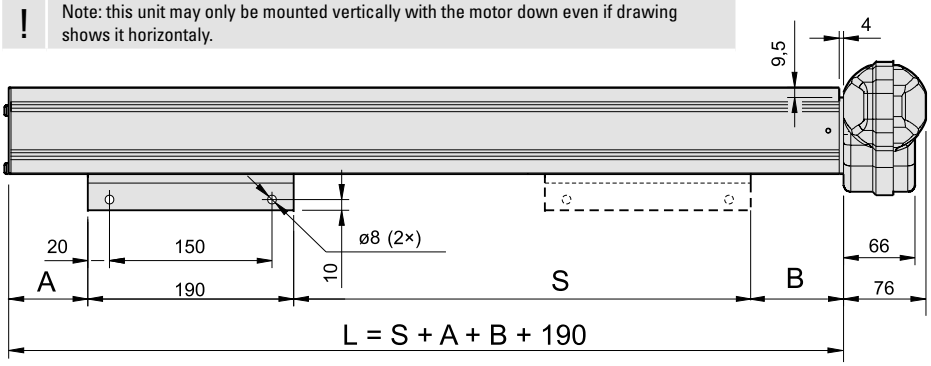

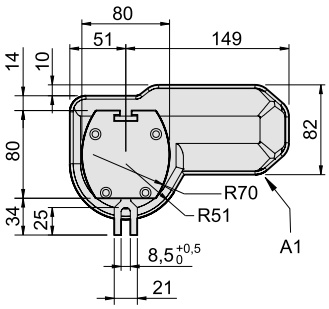

S: stroke
L: length of profile
A1: motor shown in position A (standard position)

Stroke (S)	[mm]	500	600	700	800	900	1000	1100	1200	1300	1400	1500
Dimensions (A) / (B)	[mm]											
DT•• -T68M ••••• V							50,0 / 71,0					
DT•• -B61M ••••• V							53,0 / 120,0					
DT•• -B62M ••••• V							53,0 / 120,0					
DT•• -B65M ••••• V							53,0 / 97,0					
DT•• -T68M ••••• F							50,0 / 90,0					
DT•• -B61M ••••• F							53,0 / 144,0					
DT•• -B62M ••••• F							53,0 / 144,0					
DT•• -B65M ••••• F							53,0 / 126,0					
Weight*	[kg]											
DT•• -T68M ••••• V		11,1	12,9	14,7	16,5	18,2	20,0	21,8	23,6	25,4	27,2	28,9
DT•• -B61M ••••• V		11,6	13,4	15,2	17,0	18,7	20,5	22,3	24,1	25,9	27,7	29,5
DT•• -B62M ••••• V		11,6	13,4	15,2	17,0	18,7	20,5	22,3	24,1	25,9	27,7	29,5
DT•• -B65M ••••• V		12,0	13,8	15,6	17,6	19,3	21,1	22,9	24,7	26,5	28,2	30,1

* Add 0,5 kg to the below weights to get the weights for DT•• -T68M ••••• F, DT•• -B61M ••••• F, DT•• -B62M ••••• F and DT•• -B65M ••••• F.

Performance Diagrams

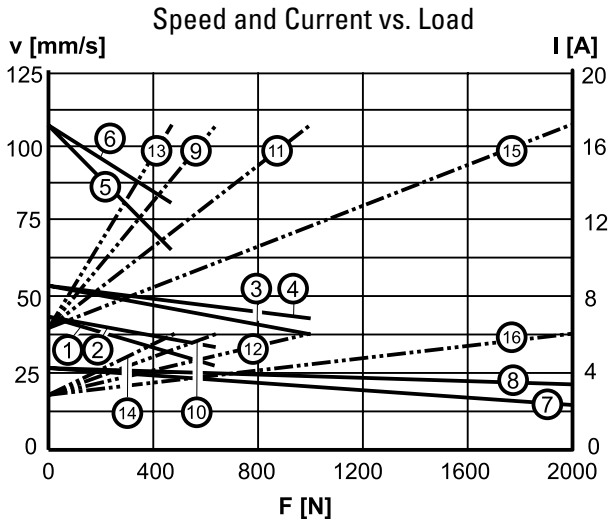

V: speed I: current F: load

1: speed DT12-T68M ••••• V(F)
2: speed DT24-T68M ••••• V(F)
3: speed DT12-B61M ••••• V(F)
4: speed DT24-B61M ••••• V(F)
5: speed DT12-B62M ••••• V(F)
6: speed DT24-B62M ••••• V(F)
7: speed DT12-B65M ••••• V(F)
8: speed DT24-B65M ••••• V(F)
9: current DT12-T68M ••••• V(F)
10: current DT24-T68M ••••• V(F)
11: current DT12-B61M ••••• V(F)
12: current DT24-B61M ••••• V(F)
13: current DT12-B62M ••••• V(F)
14: current DT24-B62M ••••• V(F)
15: current DT12-B65M ••••• V(F)
16: current DT24-B65M ••••• V(F)

Definition of Forces

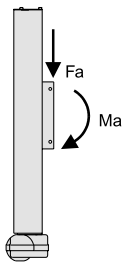

Rodless Actuator LM80-I

24 Vdc - load up to 2000 N

» Ordering Key - see page 83
» Glossary - see page 85
» Electric Wiring Diagram - see page 57

Standard Features and Benefits

- Rodless actuator for vertical operation with motor down
- For use in domestic, office or medical applications
- Rigid self supporting extruded aluminum profile
- Durable and corrosion free
- Holding brake prevents downward motion at power off
- Lightweight and quiet operation
- Safety nut on ball screw versions
- Easy and fast T-slot mounting
- Maintenance free

General Specifications

Parameter	LM80-I
Screw type	trapezoidal or ball
Internally restrained	yes
Manual override	no
Dynamic braking	no
Holding brake	yes
End of stroke protection	spring loaded soft stop
Mid stroke protection	no
Motor protection	no
Motor connection	cable
Motor connector	8-pole Molex mini-fit jr
Certificates	CE
Options	• manual override • encoder • stroke over 1500 mm*

* Contact customer support

Performance Specifications

Parameter		LM80-I
Maximum load (Fa)	[N]	
DT24-T68M • • • GCV		650
DT24-B61M • • • GCV		1000
DT24-B62M • • • GCV		450
DT24-B65M • • • GCV		2000
Maximum load torque (Ma)	[Nm]	
DT24-T68M • • • GCV		250
DT24-B61M • • • GCV		400
DT24-B62M • • • GCV		180
DT24-B65M • • • GCV		750
Speed, at no load / at maximum load	[mm/s]	
DT24-T68M • • • GCV		24 / 22
DT24-B61M • • • GCV		31 / 27
DT24-B62M • • • GCV		61 / 55
DT24-B65M • • • GCV		15 / 13
Available input voltages	[Vdc]	24
Standard stroke lengths	[mm]	500, 600, 700, 800, 900, 1000, 1100, 1200, 1300, 1400, 1500
Operating temperature limits	[°C]	0 – +40
Full load duty cycle @ 20 °C	[%]	15
Maximum on time	[s]	120
Restraining torque	[Nm]	0
Lead cross section	[mm^2]	1,5
Cable length	[mm]	2000
Protection class		IP44

Compatible Controls

Control model	See page
DPDT switch	61
DCG-180	66
DCG-260	66
AC-247 ELS	64

Rodless Actuator LM80-I

24 Vdc - load up to 2000 N

! Note: this unit may only be mounted vertically with the motor down even if drawing shows it horizontaly.

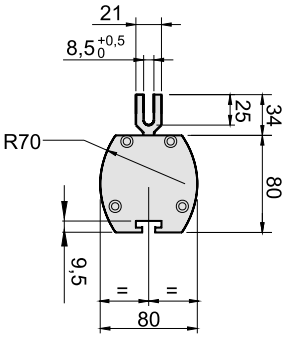

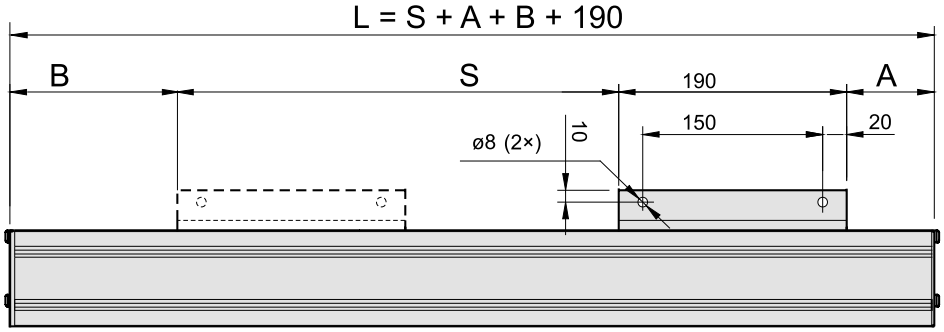

S: stroke
L: length of profile

A: non motor side
B: motor side

Stroke (S)	[mm]	500	600	700	800	900	1000	1100	1200	1300	1400	1500
Dimensions (A) / (B)	[mm]											
DT24-T68M • • • GCV							50,0 / 238,0					
DT24-B61M • • • GCV							53,0 / 287,0					
DT24-B62M • • • GCV							53,0 / 287,0					
DT24-B65M • • • GCV							53,0 / 264,0					
Weight	[kg]											
DT24-T68M • • • GCV		11,1	12,9	14,7	16,5	18,2	20,0	21,8	23,6	25,4	27,2	28,9
DT24-B61M • • • GCV		11,6	13,4	15,2	17,0	18,7	20,5	22,3	24,1	25,9	27,7	29,5
DT24-B62M • • • GCV		11,6	13,4	15,2	17,0	18,7	20,5	22,3	24,1	25,9	27,7	29,5
DT24-B65M • • • GCV		12,0	13,8	15,6	17,6	19,3	21,1	22,9	24,7	26,5	28,2	30,1

Performance Diagrams

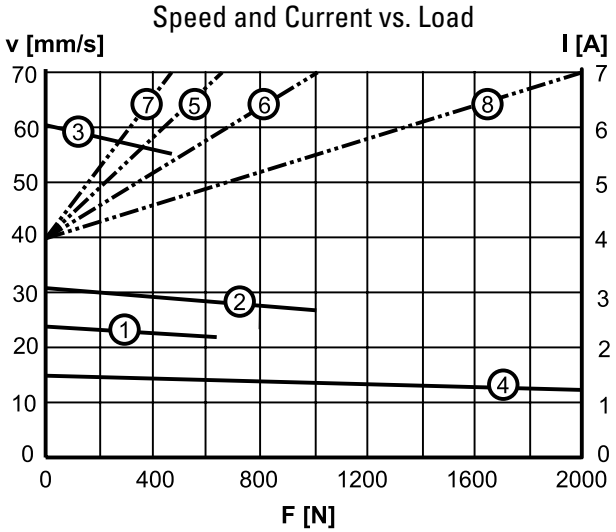

V: speed I: current F: load

1: speed DT24-T68M • • • GCV
2: speed DT24-B61M • • • GCV
3: speed DT24-B62M • • • GCV
4: speed DT24-B65M • • • GCV
5: current DT24-T68M • • • GCV
6: current DT24-B61M • • • GCV
7: current DT24-B62M • • • GCV
8: current DT24-B65M • • • GCV

Definition of Forces

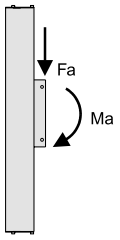

Electrak® Non-driven Actuator PPA-M

» Ordering Key - see page 84
» Glossary - see page 85

Load up to 6670 N

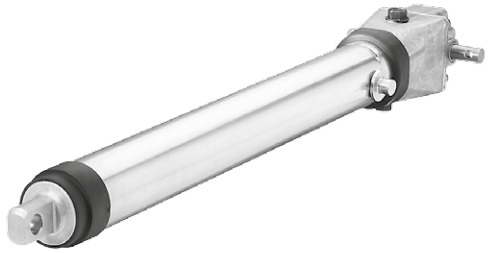

Standard Features and Benefits

- Actuator with double input shafts to which a customer supplied motor or/and an intermediate shaft can be mounted
- Can be operated manually
- Robust and versatile
- Withstands very harsh environments
- Highly efficient ball screw drive system
- Holding brake prevents back driving
- Trunnion to clevis mounting
- Maintenance free

General Specifications

Parameter	Electrak PPA-M
Screw type	ball
Internally restrained	no
Manual override	no*
Holding brake	yes
End of stroke protection	no
Mid stroke protection	no
Certificates	–
Options	protective bellows

* Either of the two input shafts can be used for manual operation if both shafts are not connected to a motor or an intermediate shaft.

Performance Specifications

Parameter		PPA-M
Maximum load, dynamic / static	[N]	6670 / 13350
Maximum speed at max. load	[mm/s]	8
Maximum input torque	[Nm]	9
Maximum input speed	[rpm]	100
Standard stroke lengths	[in]	4, 8, 12, 18, 24, 36
Operating temperature limits	[°C]	-25 – +65
End play, maximum	[mm]	1,0
Restraining torque	[Nm]	23

Electrak® Non-driven Actuator PPA-M

Load up to 6670 N

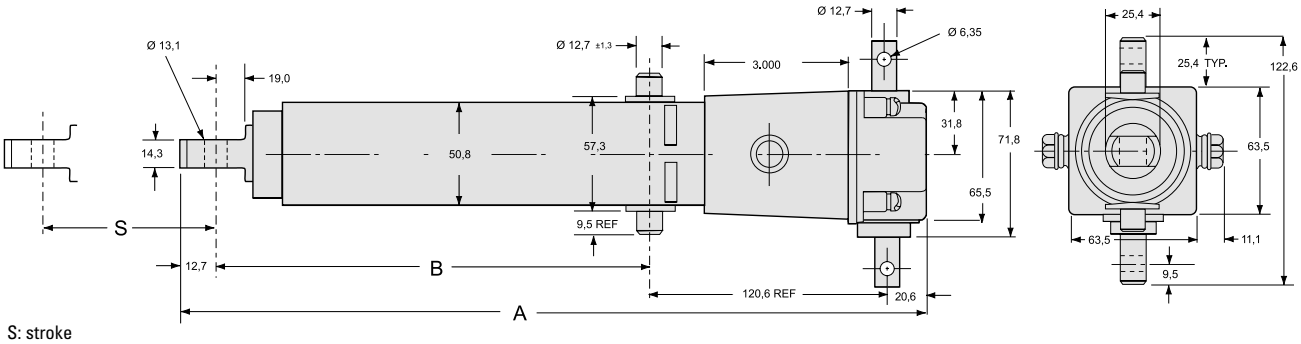

S: stroke
A: retracted length
B: retracted length to trunnions

Stroke (S)	**[mm]**	101,6	203,2	304,8	457,2	609,6	914,4
Retracted length (A)	**[mm]**	375,9	477,5	579,1	782,3	934,7	1239,5
Retracted length to trunnions (B)	**[mm]**	223,5	325,1	426,7	629,9	782,3	1087,1
Weight	**[kg]**	3,4	4,2	4,8	6,1	7,3	9,7

Synchronous Operation

Two or more PPA-M actuators can easily be mechanically linked for synchronous operation by using intermediate shafts. The intermediate shafts and necessary couplings are provided by the customer.

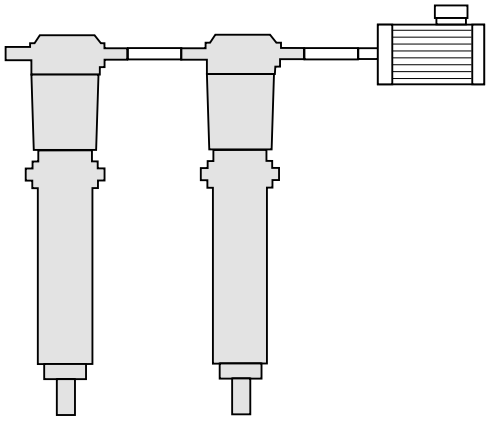

Electrak® Non-driven Actuator FA14

» Ordering Key - see page 84
» Glossary - see page 85

Load up to 6800 N

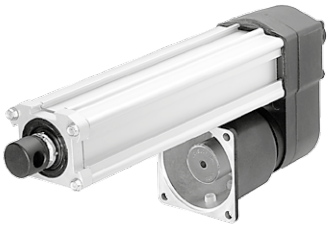

Standard Features and Benefits

- Actuator with a flange where a customer supplied motor can be mounted
- Rugged and robust
- Withstands very harsh environments
- Stainless steel extension tube
- Corrosion free aluminium cover tube
- Acme or ball screw drive
- Trunnion mounting possible
- Overload clutch for mid and end of stroke protection
- T-slot grooves in the cover tube for magnetic sensors
- Maintenance free

General Specifications

Parameter	FA14
Screw type	acme or ball
Internally restrained	yes
Manual override	no, optional
Holding brake acme screw versions ball screw versions	 no, self-locking yes
End of stroke protection	overload clutch
Mid stroke protection	overload clutch
Certificates	CE
Options	• manual override • alternative adaptor positions • custom color*

* Contact customer support

Performance Specifications

Parameter		FA14
Maximum load, dynamic / static	[N]	
FA14-05A65 (acme screw)		1100 / 11350
FA14-10A65 (acme screw)		2250 / 11350
FA14-20A65 (acme screw)		2250 / 11350
FA14-05B65 (ball screw)		2250 / 18000
FA14-10B65 (ball screw)		4500 / 18000
FA14-20B65 (ball screw)		4500 / 18000
FA14-21B65 (ball screw)		6800 / 18000
Maximum speed at max. load*	[mm/s]	
FA14-05A65 (acme screw)		32
FA14-10A65 (acme screw)		18
FA14-20A65 (acme screw)		12
FA14-05B65 (ball screw)		37
FA14-10B65 (ball screw)		19
FA14-20B65 (ball screw)		12
FA14-21B65 (ball screw)		11
Maximum input torque	[Nm]	1,8
Maximum input speed	[rpm]	3000
Standard stroke lengths	[mm]	50, 100, 150, 200, 250, 300, 350, 400, 450, 500, 550 ,600
Operating temperature limits	[°C]	-25 – +65
End play, maximum	[mm]	1,0
Restraining torque	[Nm]	0

* Recommended maximum speed

Electrak® Non-driven Actuator FA14

Load up to 6800 N

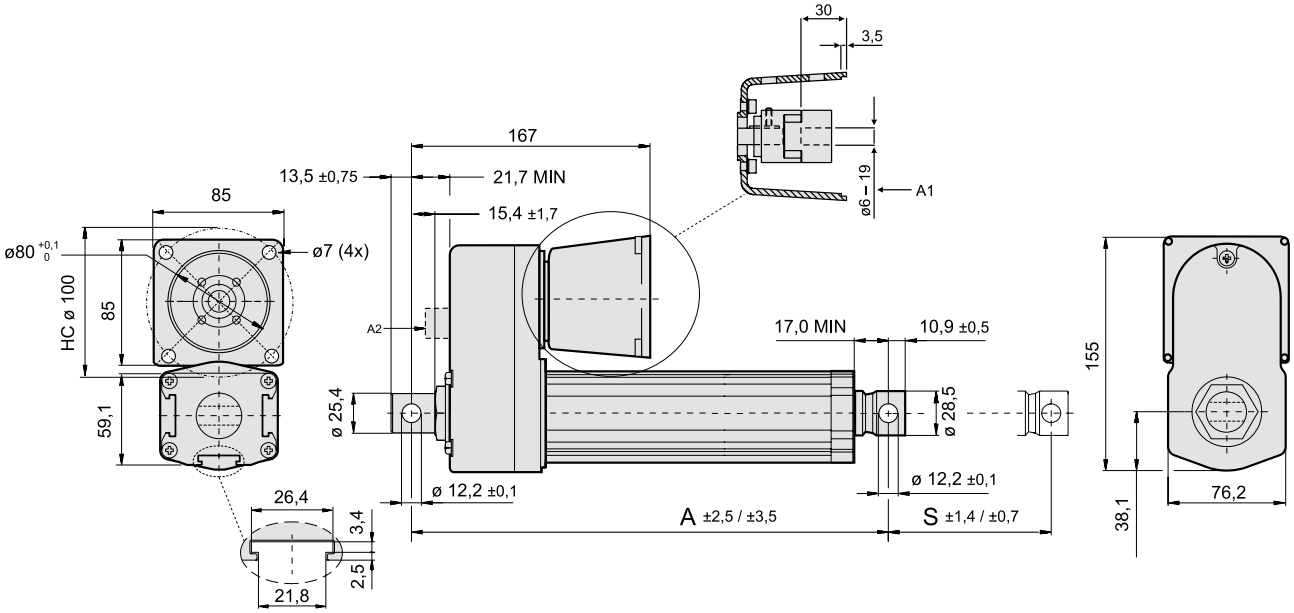

S: stroke, tolerance acme / ball screw
A: retracted length, tolerance acme / ball screw
A1: minimum/maximum input shaft bore in the coupling (supplied with a 6 mm hole)
A2: manual override input (optional)
Note: The standard flange for FA14 is IEC 80.

Stroke (S)	[mm]	50	100	150	200	250	300	350	400	450	500	550	600
Retracted length (A), acme screw models	[mm]	216,7	266,7	316,7	366,7	416,7	466,7	566,7	616,7	666,7	716,7	766,7	816,7
Retracted length (A), ball screw models	[mm]	269,6	319,6	369,6	419,6	469,6	519,6	619,6	669,6	719,6	769,6	819,6	869,6
Weight, acme screw models	[kg]	3,5	3,7	4,0	4,2	4,5	4,7	5,0	5,2	5,5	5,7	6,0	6,3
Weight, ball screw models	[kg]	4,2	4,5	4,7	5,0	5,2	5,5	5,7	6,0	6,2	6,5	6,7	7,0

Optional Flanges Overview

Description	Outer dimension on flange [mm]	Flange inner diameter [mm]	Hole circle (HC) [mm]	Pilot Spigot Ø	Total length [mm]
Nema 23	Ø90	38,1	Ø66,675	38,1	68
Nema 34	92x92	74	Ø100	80	91,5
IEC 63 B14	Ø90	-	Ø75	60	64
Servo 80, S80	92x92	-	Ø100	80	71
IL348	85x85	-	Ø100	73	71
AKM3x-AN	Ø90	50	Ø75	60	73
AKM4x-AN	92x92	74	Ø100	80	91,5

Note: Optional flanges are available separately as conversion kits. Part number see page 84.

Electrical Wiring Diagrams

DC-actuators

Electrak 1 and 1SP

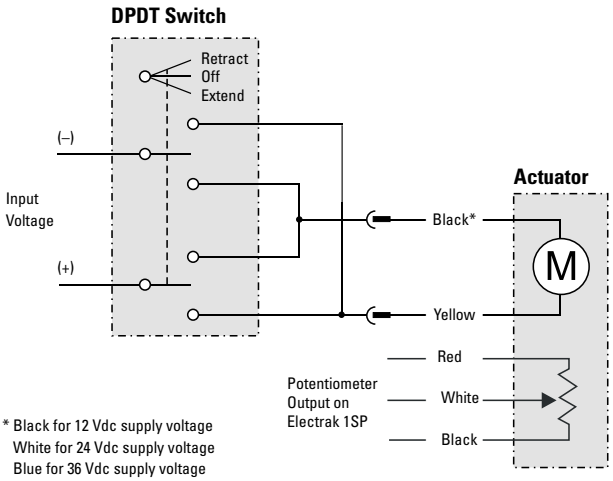

Connect the yellow lead to positive and black, white or blue* to negative to extend the actuator. Change polarity to retract the actuator. The potentiometer output has 0 ohm between white and red when the actuator is fully retracted. The actuator should be protected from overload conditions by a customer provided fuse in the circuit (6 A for 12 Vdc, 3 A for 24 Vdc and 2 A for 36 Vdc).

Electrak 10, LA14

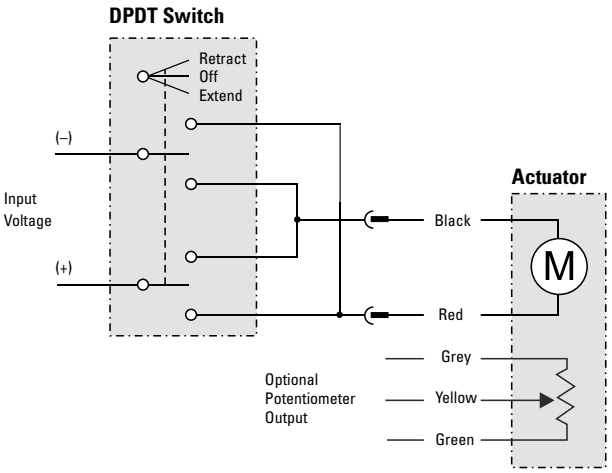

Connect the red lead to positive and black to negative to extend the actuator. Change polarity to retract the actuator. The potentiometer output has 0 ohm between grey and yellow when the actuator is fully extended.

Electrak 050

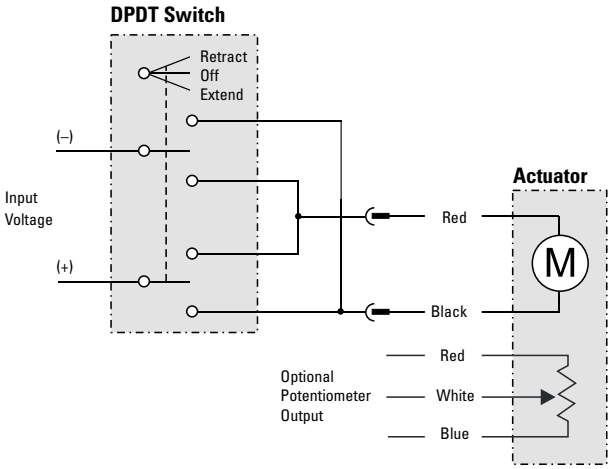

Connect the black lead to positive and red to negative to extend the actuator. Change polarity to retract the actuator. The potentiometer output has 0 ohm between white and red when the actuator is fully retracted.

DMD

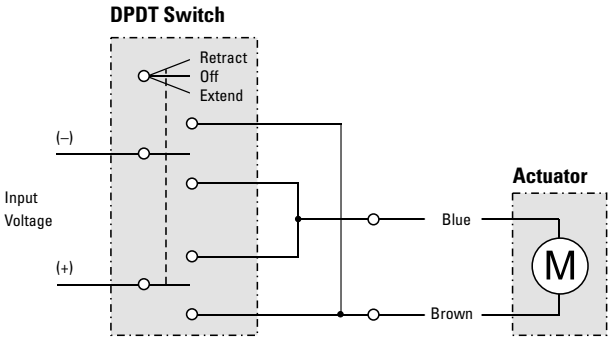

Connect the brown lead to positive and blue to negative to extend the actuator. Change polarity to retract the actuator.

Electrical Wiring Diagrams

DC-actuators

Electrak PPA-DC

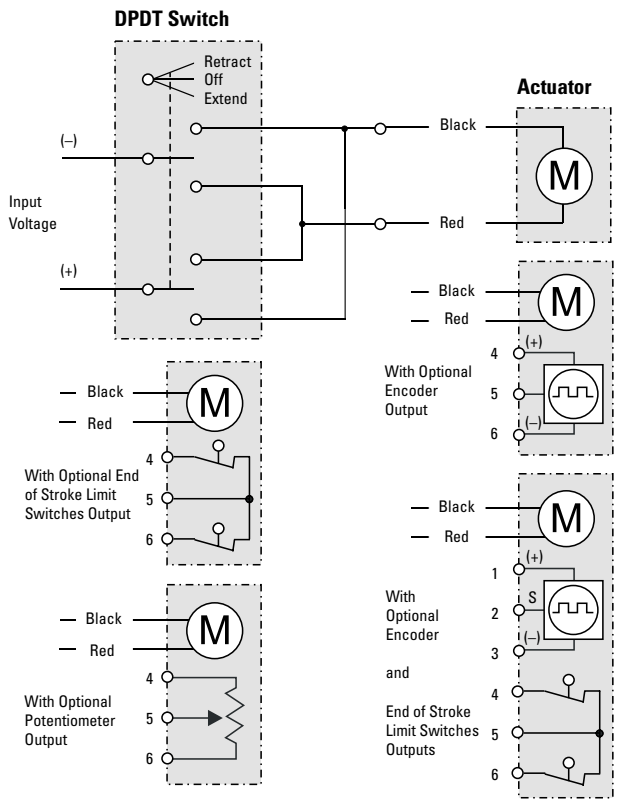

Connect the black lead to positive and red to negative to extend the actuator. Change polarity to retract the actuator. The encoder is supplied with 4,5 - 12 Vdc between terminals 4 or 1 and 6 or 3 and the pulse train signal is generated on terminal 5 or 2. The potentiometer output has 0 ohm between terminal 4 and 5 when the actuator is fully retracted.

LC1600

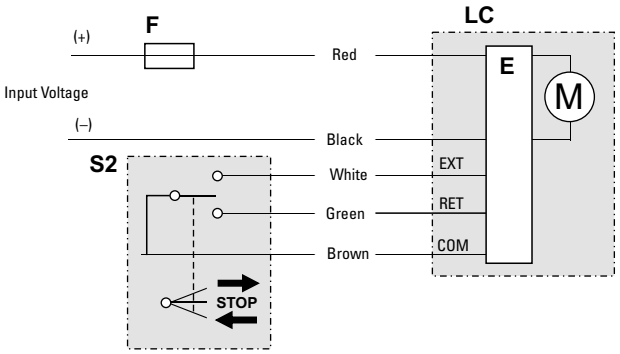

Connect the white (EXT) and brown (COM) leads to extend the actuator. To retract the actuator connect the green (RET) and brown (COM) leads.
The actuator will automatically switch off when reaching the ends of stroke or a mid-stroke overload.

With encoder feedback (NE) or with no feedback options (NX): For the LC1600, only use the NE and NX versions with the DCG control.

LC2000 / 3000, LM80-H/ -V / -I

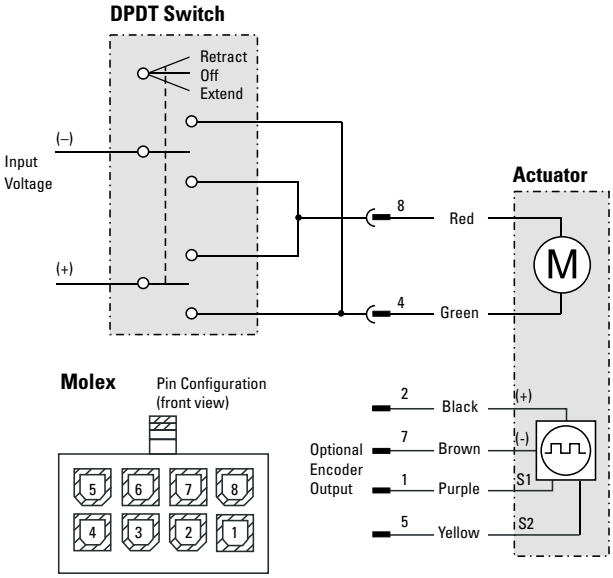

Connect the green lead to positive and red to negative to extend the actuator. Change polarity to retract the actuator. The encoder is supplied with 5 - 18 Vdc on pin 2 and 7 and the two pulse train signals are generated on pin 1 and 5.

Electrical Wiring Diagrams

AC-actuators

Electrak 5, LA24 and DMA - 1 × 230 Vac

Without anti coast brake*

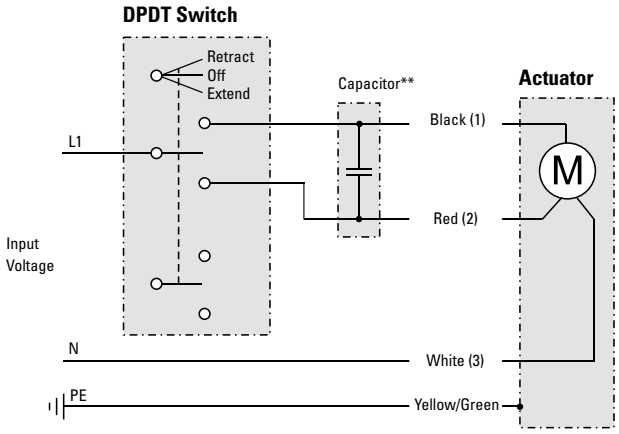

With anti coast brake*

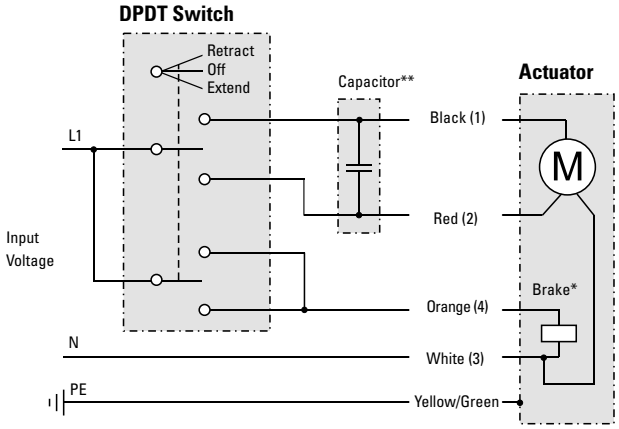

* Anti coast brake is standard on Electrak 5 / LA24 for ball screw models and optional for acme screw models.On DMA there are no anti coast brake on acme models while ball screw models always are equipped with an anti coast brake.
** 10 µF capacitor required to run the actuator, p/n 9200-448-003.

Leads can be either color or number marked. Connect black (1) lead to L1 and white (3) lead to N (neutral) to retract the actuator. Change L1 from lead black (1) to lead red (2) to extend the actuator. If the actuator is equipped with an anti coast brake, release the brake by connecting orange (4) lead lead to L1.

Electrak 5, LA24 and DMA - 3 × 400 Vac

Without anti coast brake*

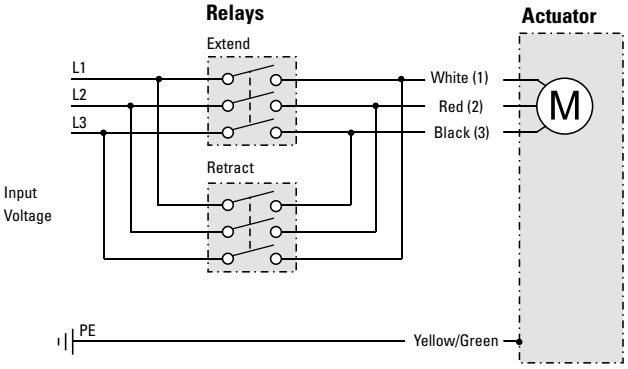

With anti coast brake*

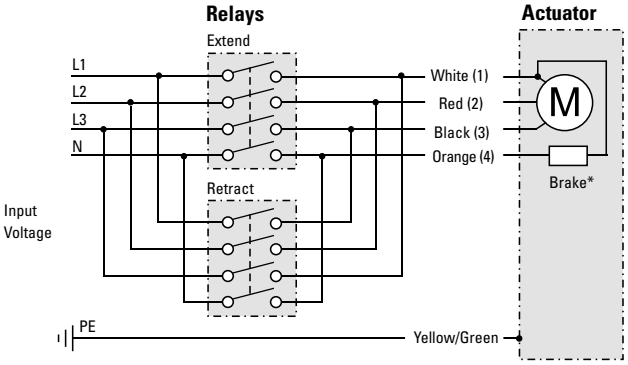

* Anti coast brake is optional on Electrak 5 / LA24 on both acme and ball screw models. On DMA there are no anti coast brake on acme models while ball screw models always are equipped with an anti coast brake.

Leads can be either color or number marked. Connect white (1) lead to L1, red (2) lead to L2 and black (3) lead to L3 to extend the actuator. Change the places of white (2) lead and black (3) to to retract the actuator. If the actuator is equipped with an anti coast brake, release the brake by connecting orange (4) lead to N (neutral).

Electrical Wiring Diagrams

DC-actuators

Electrak Throttle

Connect the actuator according to the table below. Actuator will extend if connected as in the table, shift polarity between red (pin 1) and black (pin 3) leads and it will retract. Mating Deutsch connector kit can be ordered from Thomson (P/N 9100-448-021). Note: Connector pin 2 is not used, but contains a sealing plug.

Option name and order key code	Lead color or Deutsch DTM04-6P connector pin number				
	Red (1)	Black (3)	Brown (4)	White (5)	Green (6)
Analog position feedback sensor (NP)	Motor (+)	Motor (-)	VDC in (+)	VDC out	VDC in (-)
End of stroke limit switches (FN)	Motor (+)	Motor (-)	-	-	-
Analog position feedback sensor and limit switches (FP)	Motor (+)	Motor (-)	VDC in (+)	VDC out	VDC in (-)
CANBUS SAE J1939 (CN)	Power (+)	Power (-)	CAN High	CAN Shield*	CAN Low

See Installation Manual for additional information.

* Not required to connect.

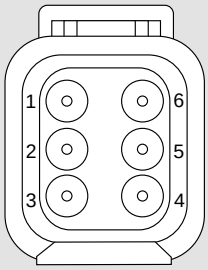

Deutsch connector rear view

Analog Position Feedback Sensor Installation Data

Brown (pin 3) and green (pin 6) are connected to a voltage source. When extending the actuator the voltage will increase between green (pin 6) and white (pin 5).

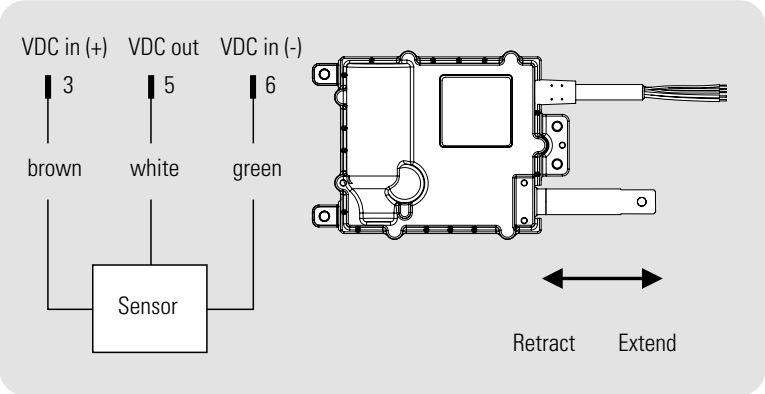

Sensor Specifications

Input voltage, max. (VDC in)	[VDC]	32
Output voltage (VDC out) at fully retracted at fully extended	[VDC]	 < 5 % VDC in > 75% VDC in
Max. output current	[mA]	1
Linearity	[± %]	1

Actuator Controls

General

Whether you plan to operate from a simple pushbutton or a programmable controller, Thomson controls can make your system easy to design, install and operate. Designed to drive actuators, the controls on the following pages are equipped either with easy to use terminal strips or plugs compatible with the actuators for ease of wiring. The controls can be operated manually via external push buttons/switches, hand held pendants or from electronic controls such as a PLC. We also have other actuator controls which may meet your particular needs. Contact customer service if you don't see the right control for your application.

Actuator Controls

Switches

DPDT Switch

- Robust switch
- Double pole, double throw (DPDT)
- 15 A rating at 270 Vac
- Center "off"
- Two momentary contacts
- Wiring diagram on label

Specifications

Parameter		DPDT Switch
Maximum voltage	[Vac]	270
Maximum current	[A]	15
Part number		830-8004-016

Actuator Compatibility

Electrak 1, Electrak 1SP, Electrak 050, Electrak PPA-DC, Electrak 10, Electrak LA14, Electrak 5, Electrak Throttle, Electrak LA24, LC, DMD, DMA, LM80-H, LM80-V, LM80-I, DGB

Wiring Diagram

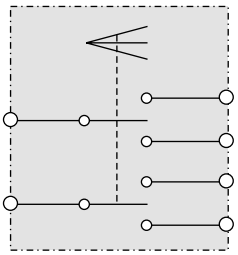

Dimensions

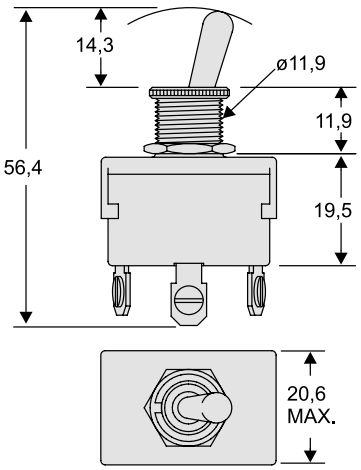

! Note: sometimes the switch can manage higher current than the actuator and sometimes it is the other way around. Always make sure that both the switch and the actuator can manage the current that the application require.

Actuator Controls

Electronic Controls

Control AC-063

- Rugged and robust control designed to operate under the hardest conditions
- Auto shut off function if the current or duty cycle limits of the control is exceeded.
- Robust plastic enclosure
- Versions for DC or AC supply voltage
- Versions with or without limit switch inputs
- Versions with or without control pendant

Actuator Compatibility

AC-063B	Electrak PPA-DC, Electrak 10, Electrak LA14, DMD
AC-063BC	Electrak PPA-DC, Electrak 10, Electrak LA14, DMD
AC-063C	Electrak PPA-DC, Electrak 10, Electrak LA14, DMD

! Note: sometimes the control can manage higher current and/or duty cycle than the actuator and sometimes it is the other way around. Always make sure that both the control and the actuator can manage the current and duty cycle that the application require.

Dimensions

AC-063B

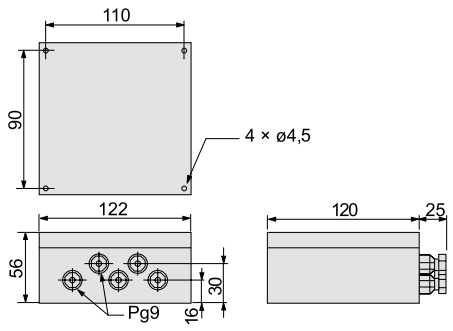

AC-063BC

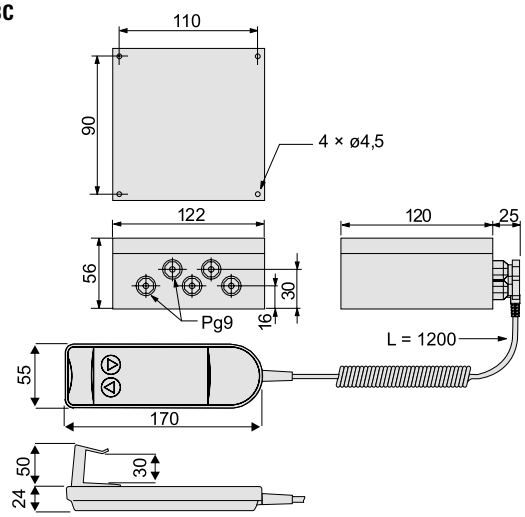

AC-063C

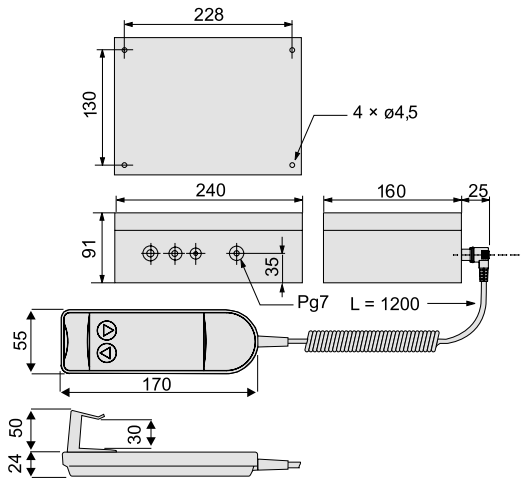

Actuator Controls

Electronic Controls

Control AC-063

Specifications

Parameter		AC-063B		AC-063BC		AC-063C	
Input voltage	[V]						
Vdc		12 – 36	12 – 36	12 – 36	12 – 36	-	-
Vac @ 50 Hz		-	-	-	-	230	230
Output voltage	[Vdc]	12 – 36	12 – 36	12 – 36	12 – 36	24	24
Output current, max.	[A]						
@ 12 Vdc output		30	30	30	30	-	-
@ 24 Vdc output		17	17	17	17	17	17
@ 36 Vdc output		12	12	12	12	-	-
Max. duty cycle @ 25 °C	[%]	10	10	10	10	10	10
Weight of control	[kg]	0,4	0,4	0,4	0,4	3	3
Protection class		IP65	IP65	IP54	IP54	IP54	IP54
Limit switch inputs		no	yes	no	yes	no	yes
Control pendant included		no	no	yes	yes	yes	yes
Certificates		CE	CE	CE	CE	CE	CE
Part number		DC24-1B	DCA24-1B	DC24-1BC	DCA24-1BC	DC24-1C	DCA24-1C

Wiring Diagram

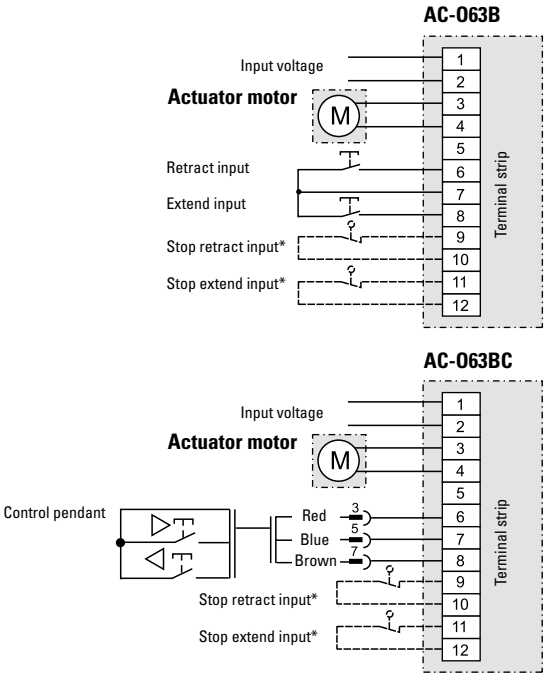

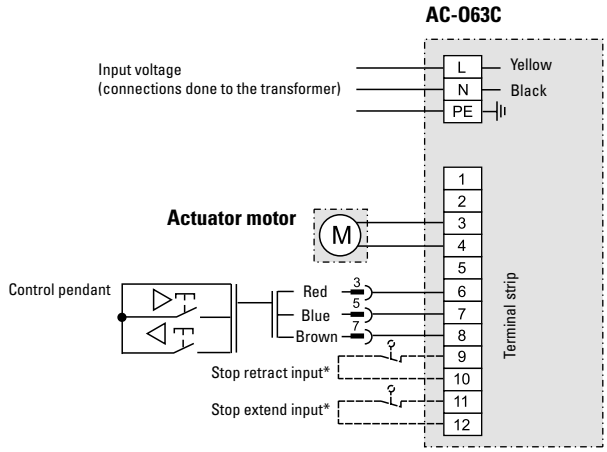

* On models without stop retract and stop extend inputs these terminals are not available.

Actuator Controls

Electronic Controls

Control AC-247 ELS

- Compact, robust and light weight
- Electronic limit switches (ELS) stop the actuator at end of stroke if the actuator runs into an obstacle
- Connector input for DCG14-1H control pendant

Actuator Compatibility

Electrak 1, Electrak 1SP, Electrak 050, LM80-H, LM80-V, LM80-I

Wiring Diagram

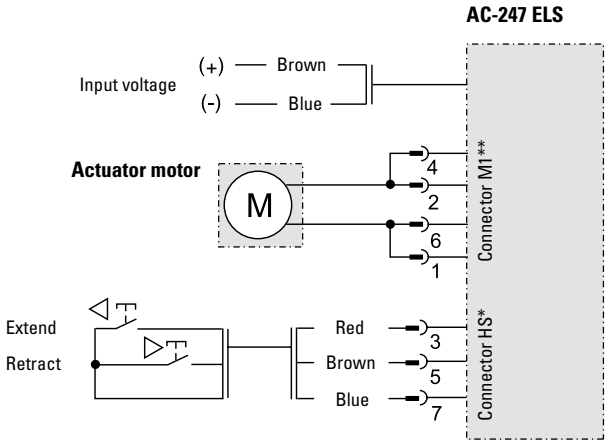

* The diagram shows the control connected to control pendant DCG14-1H, but any type of normally open contacts can be used to control the direction of the actuator.

** Each motor lead must be connected to two pins in the connector in order to not exceed the current limit of the connector.

Dimensions

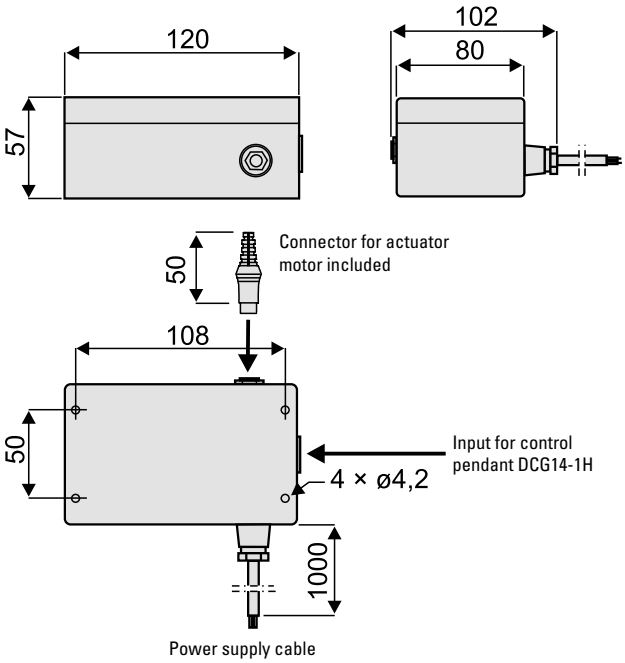

!	Note: sometimes the control can manage higher current and/or duty cycle than the actuator and sometimes it is the other way around. Always make sure that both the control and the actuator can manage the current and duty cycle that the application require.

Actuator Controls

Electronic Controls

Control AC-247 ELS

Specifications

Parameter		AC-247 ELS	AC-247 ELS	AC-247 ELS
Input voltage	[Vdc]	12 or 24	12	24
Output voltage	[Vdc]	12 or 24	12	24
Output current, max. @ 12 Vdc output @ 24 Vdc output	[A]	 10 5	 12 -	 - 8
Max. duty cycle @ 25 °C	[%]	10	10	10
Weight of control	[kg]	0,3	0,3	0,3
Protection class		IP54	IP54	IP54
Electronic limit switches		yes	yes	yes
Connector for control pendant		yes[1]	yes[1]	yes[1]
Control pendant included[1]		no	no	no
Certificates		CE	CE	CE
Part number		D604 110	D604 111	D604 112

[1]Control pendant type DCG14-1H is recommended, see page 68.

Actuator Controls

Electronic Controls

» Ordering Key - see page 83
» Glossary - see page 85

Control DCG

- Controls available for single actuator operation or synchronous operation of two actuators equipped with encoders.
- Small and light weight control operated via a control pendant which is ordered separately
- Built in Electronic Limit Switches (ELS) stop the actuator automatically at end of stroke or mid stroke stall
- The control pendant is ordered separately
- The "Control to Actuator" cable is ordered separately and comes in several version depending of the type of actuator being used

Actuator Compatibility

DCG-150	Electrak 1, Electrak 1SP, Electrak 050 [1], Max Jac, LC1600
DCG-160	LM80-V
DCG-170	LM80-H
DCG-180	LC2000, LC3000, LM80-I
DCG-190	LA10, LA14, PPA-DC, DMD
DCG-250	Synchronous operation of two LC1600 [2]
DCG-260	Synchronous operation of two LM80-I [2]
DCG-280	Synchronous operation of two LC2000, LC3000 [2]

[1] This control does not work with Electrak 050 that has the limit switch option ("FS" or "PF" option).
[2] The units must be equipped with encoders. LM80-I can not have spline safety function.

!	Note: sometimes the control can manage higher current and/or duty cycle than the actuator and sometimes it is the other way around. Always make sure that both the control and the actuator can manage the current and duty cycle that the application require.

Dimensions

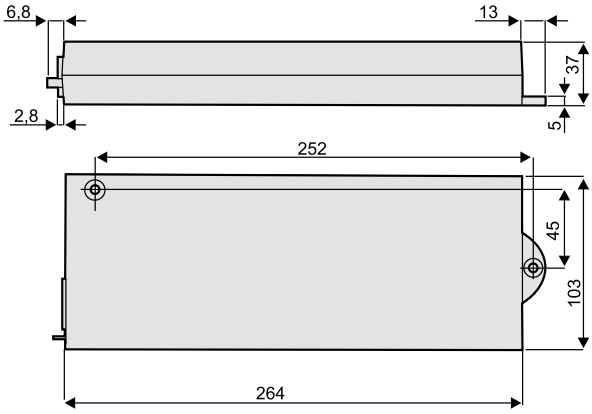

Wiring Diagram

No wiring is necessary to the control. All connections are done through plugs.

Actuator Controls

Electronic Controls

DCG Controls Overview

Specifications

Parameter		DCG-150	DCG-160	DCG-170	DCG-180	DCG-190	DCG-250 [7]	DCG-260 [5]	DCG-280 [8]
Input voltage [1]	[Vac]	1 × 230 ± 6%							
Input frequency	[Hz]	50/60							
Output voltage	[Vdc]	24							
Output current, max.[2] up down	[A]	4 4	8 5,6	8 8	8 8	13 13	4 4	2 × 8 2 x 5,6	2 x 8 2 × 8
Operating temperature limits	[°C]	+0 – +30							
Max. duty cycle @ 25 °C [3]	[%]	10							
Maximum on time	[s]	60	120	120	60	60	60	60	60
Weight of control	[kg]	0.5							
Protection class		Class 1 (not for outdoor use)							
Electronic limit switches		yes	yes	yes	yes	yes	yes[6]	yes[6]	yes[6]
Included control pendant [4]		no							
Certificates		CE							

[1] 115 Vac input voltage also available. Contact customer support.

[2] These controls are current limited. Review the current/load curves for the actuator you selected to make sure the control will provide enough current for the thrust you need. You may need to select one of the AC-063 or AC-247 ELS controls.

[3] Control will shut off if duty cycle is exceeded and automatically reset when cooled off.

[4] Control pendant type DCG14-1H is recommended, see page 68.

[5] Control for synchronous operation of two LM80-I rodless actuators. Contact customer support for information on synchronous operation of other actuator models.

[6] DCG-250, DCG-260, DCG-280 uses a pulse counting function instead of current sensing to determine if the actuator is moving at the correct speed. If the pulses arrives too slowly or not at all the control will stop the motion of both actuators.

[7] Control for synchronous operation of two LC1600 lifting columns.

[8] Control for synchronous operation of two LC2000 or LC3000 lifting columns. Contact customer support for information on synchronous operation of other actuator models.

Actuator Controls

Control Accessories

DCG Control Pendant

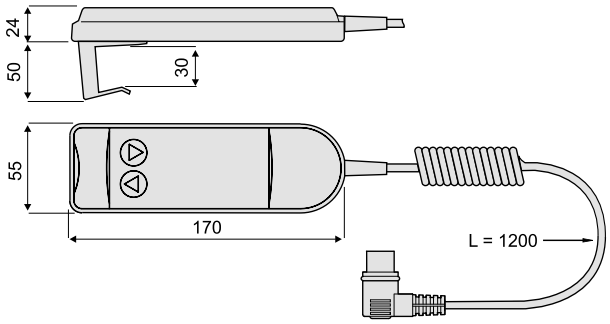

Specifications

Parameter		DCG14-1H
Weight	[kg]	0,4
Cable length	[mm]	1200
Certificates		CE
Part number		DCG14-1H

- Handy and light weight control pendant with spiral cord cable which connects to the DCG, AC-063 (possible on BC and C versions only) and AC-247 ELS control pendant input with a plug

Control to Control Cable for DCG, AC-063 and AC-247 ELS Controls

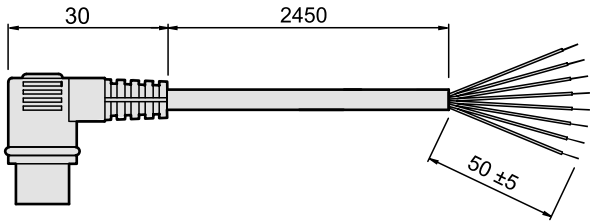

Specifications

Parameter		
Lead cross section	[mm²]	7 × 0,14
Cable length	[mm]	2450
Part number		D620 095

- This cable connects with its plug to the control pendant input on DCG, AC-063 (possible on BC and C versions only) and AC-247 ELS in order to connect the control to another device than the DCG control pendant

Actuator Controls

Control Accessories

Control to Actuator Cables with Single Connector for DCG Controls

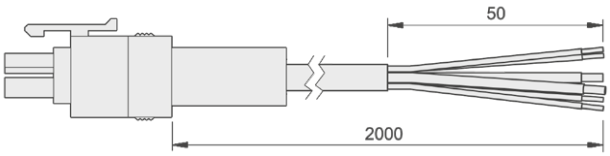

• Connects the DCG control to actuators without connector

Specifications

Parameter		
Lead cross section [mm²]	4 × 0,25 + 2 × 1,5	4 × 0,25 + 2 × 1,5
Cable length [mm]	2000	4300
Part number	D620 143	D620 145

Accessories and Spare Parts

Mounting Components

Mounting Pin Kits

Designation	Compatible Actuators	A [mm]	Part Number
Mounting pins (pair)	Electrak 10, Electrak 5	12,7	D603 028
Mounting pins (pair)	Electrak LA14, LA24, FA14	12	D603 023

The mounting pins are used in the rear and front adapter holes of the actuator. The pins have a groove in each end so that it can be secured with snap rings.

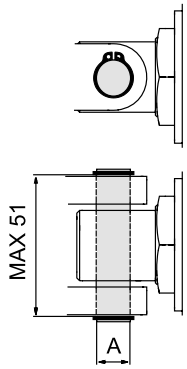

Mounting Pin Bracket Kits

Designation	Compatible Actuators	Part Number
Mounting pin brackets (pair)	Electrak LA14, LA24, FA14	D603 029

The mounting pin brackets are used to attach the front and rear adapter via a pair of mounting pins to the objects to which it is mounted. Note! one pair of brackets is needed per adapter as there must be a bracket on each side of the adapter.

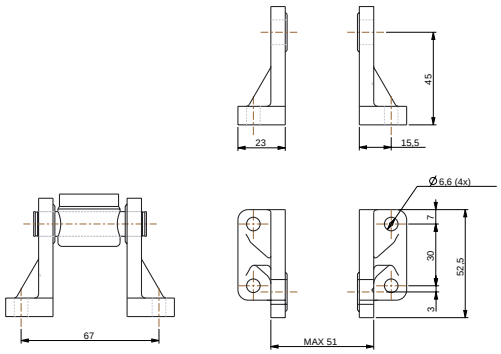

T-slot Bolt

Designation	Compatible Actuators	Part Number
M10 T-slot bolt	DMD, DMA	D800041

The T-slot bolt fits in to the T-slot running along the outer profile of DMD and DMA lifting columns. The T-slot bolts can be used to mount the unit instead of using the upper mounting plate, or/and for attaching other components to the profile.

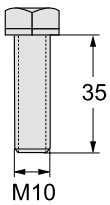

Accessories and Spare Parts

Mounting Components

T-slot Mounting Kit

Designation	Compatible Actuators	Part Number
M8 T-slot mounting kit	LM80-H, LM80-V, LM80-I	D680507

The T-slot mounting kit consists of four T-slot bolts, washers and nuts that fit in to the T-slot running along the profile of LM80 rodless actuators. The T-slot mounting kit can be used to mount the unit or/and for attaching other components to the profile.

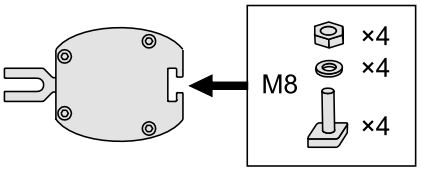

Trunnion Mounting Kits

Designation	Compatible Actuators	Part Number
Trunnions (pair)	Electrak LA14, LA24, FA14	D603 022
Trunnion brackets (pair)	Electrak LA14, LA24, FA14	D603 030

The trunnions can be mounted to the T-slot running along the right and left side of the cover tube on an Electrak LA14, LA24 or FA14.

Trunnions

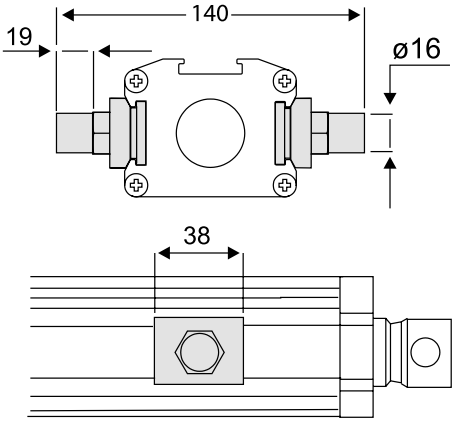

Trunnion Brackets

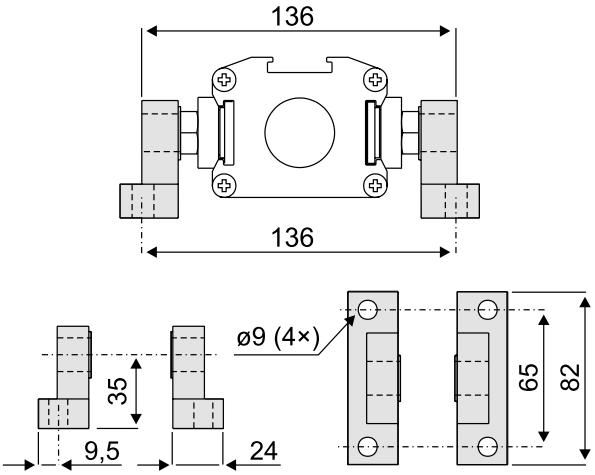

Accessories and Spare Parts

Mounting Components

PPA Rear Clevis Mounting Kits

Designation	Compatible Actuators	Part Number
PPA rear clevis mounting kit for DC actuators	Electrak PPA-DC	7827320
PPA rear clevis mounting kit	Electrak PPA-DC	7824295

The rear clevis mounting kits are attached to the tube of an Electrak PPA actuator allowing the actuator to be mounted clevis to clevis style. Note that one of the kits fits both PPA-DC and PPA-AC actuators while the other only fits PPA-DC actuators.

PPA Rear Clevis Mounting Kit

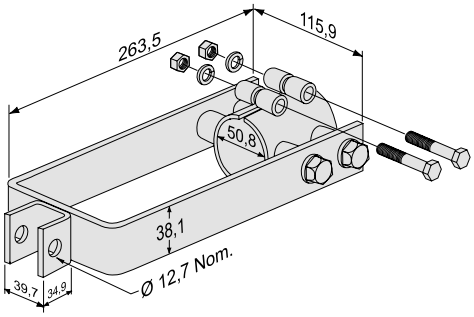

PPA Rear Clevis Mounting Kit for DC Actuators

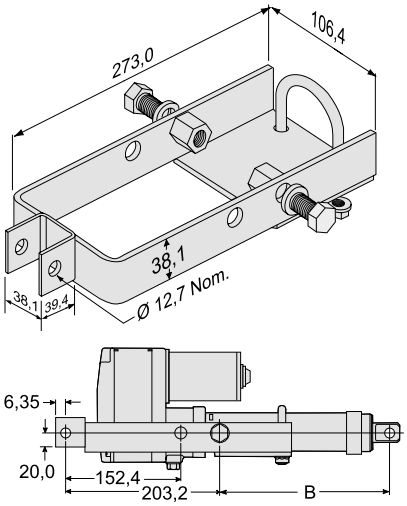

B: retracted length to trunnion, also see product pages.

PPA Tube Mounting Kits

Designation	Compatible Actuators	Part Number
Electrak PPA tube mount - light duty 3330 N	Electrak PPA-DC	7822520
Electrak PPA tube mount - heavy duty 6670 N	Electrak PPA-DC	7821783

The tube mounting kits work as a clamp that is mounted at any desired position along the actuator tube. Trunnion pins for the tube mount clamp are supplied and mounted by the customer.

Electrak PPA Tube Mount - Light Duty 3330 N

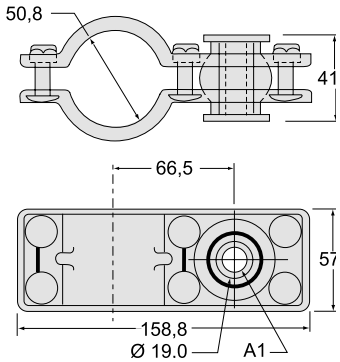

A1: hole diameter 12,7 with bushing.

Electrak PPA Tube Mount - Heavy Duty 6670 N

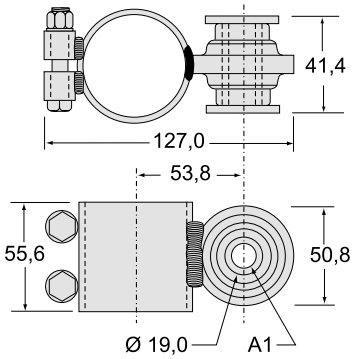

A1: hole diameter 12,7 with bushing.

Accessories and Spare Parts

Electrical Components

Capacitor Kits

Designation	Compatible Actuators	Actuator Supply Voltage	Part Number
Capacitor kit	Electrak 5, LA24, DMA	115 Vac	9200-448-002
Capacitor kit	Electrak 5, LA24, DMA	230 Vac	9200-448-003

All 230 and 115 Vac actuators require a capacitor to be wired between the windings to run. The capacitor needs to be mounted externally by the customer. Also see the Electrical Wiring Diagrams section.

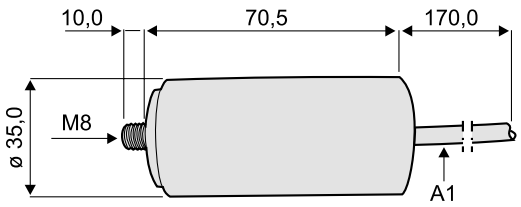

A1: cable 2 × 0,75 mm²

Magnetic Sensor

Designation	Compatible Actuators	Contact Type	Part Number
Magnetic sensor	Electrak LA14, LA24, FA14	normally open	D535 070
Magnetic sensor	Electrak LA14, LA24, FA14	normally closed	D535 071
Magnetic sensor	Electrak LA14, LA24, FA14	changing	D535 073

Specifications

Parameter		D535 070 D535 071	D535 073
Maximum power	[W]	10	10
Maximum voltage	[Vdc]	43	43
Maximum current	[A]	0,5	0,5
Maximum contact resistance	[ohm]	0,2	0,2
Lead cross section	[mm²]	2 × 0,14	3 × 0,14
Cable length	[mm]	3000	3000
Protection class		IP67	IP67

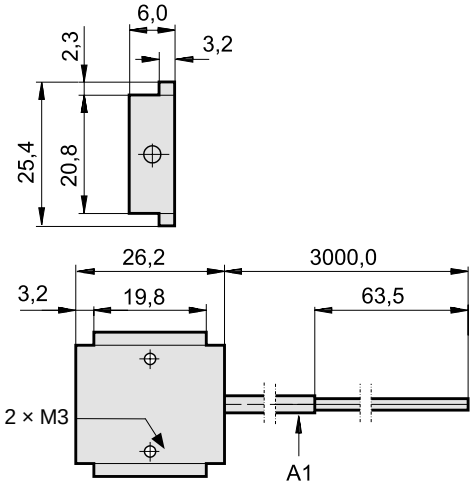

A1: cable

The magnetic sensor fits in to the T-slot running along three sides of the cover tube on an Electrak LA14, LA24 or FA14. The normally closed sensors can be used with AC-063 controls that have limit switch inputs. The cable is molded into the switch.

Ordering Keys

Electrak DC-actuators

Electrak 1

1	2	3
S24 -	09A04 -	06
1. Model and input voltage S12 - = Electrak 1, 12 Vdc S24 - = Electrak 1, 24 Vdc S36 - = Electrak 1, 36 Vdc	**2. Dynamic load capacity and max. speed** 09A04 = 110 N, 75 mm/s 09A08 = 225 N, 45 mm/s 17A08 = 340 N, 26 mm/s 17A16 = 340 N, 14 mm/s	**3. Electrical stroke (actual stroke in mm)** 01 = 1 inch (20,8 mm) 02 = 2 inch (46,2 mm) 03 = 3 inch (71,6 mm) 04 = 4 inch (97,0 mm) 05 = 5 inch (122,4 mm) 06 = 6 inch (147,8 mm)

Electrak 1SP

1	2	3
SP24 -	09A04 -	06
1. Model and input voltage SP12 - = Electrak 1SP, 12 Vdc SP24 - = Electrak 1SP, 24 Vdc SP36 - = Electrak 1SP, 36 Vdc	**2. Dynamic load capacity and max. speed** 09A04 = 110 N, 75 mm/s 09A08 = 225 N, 45 mm/s 17A08 = 340 N, 26 mm/s 17A16 = 340 N, 16 mm/s[1]	**3. Ordering stroke (actual stroke in mm)** 02 = 2 inch (58,7 mm) 04 = 4 inch (115,1 mm) 06 = 6 inch (171,5 mm) [1]Not possible in combination with 6 inch stroke.

Ordering Keys

Electrak DC-actuators

Electrak 050

1	2	3	4
DE24 -	17W44M	15	FS

1. Model and input voltage
DE12 - = Electrak 050, 12 Vdc
DE24 - = Electrak 050, 24 Vdc
DE36 - = Electrak 050, 36 Vdc
DE24Q = Electrak 050, 24 Vdc, Q-version[1]

2. Dynamic load capacity and color
17W41M = 510 N, black housing
17W42M = 275 N, black housing
17W44M = 140 N, black housing
17W41W = 510 N, white housing[1]
17W42W = 275 N, white housing[1]
17W44W = 140 N, white housing[1]

3. Stroke
02 = 25 mm
05 = 50 mm
07 = 75 mm
10 = 100 mm
12 = 125 mm
15 = 150 mm
17 = 175 mm
20 = 200 mm

4. End of stroke limit switches and potentiometer
FS = limit switches and no potentiometer
PO = potentiometer[2]
PF = limit switches and potentiometer[2]
MF = crossholes rotated 90° and limit switches
MP = crossholes rotated 90° and potentiometer[2]

[1] White housing is standard for the Q-version.
[2] Not possible in combination with 200 mm stroke.

Electrak PPA-DC

1	2	3	4	5	6
PPA24 -	58B65 -	18	N -	LS	X

1. Model and input voltage
PPA12 - = Electrak PPA-DC, 12 Vdc
PPA24 - = Electrak PPA-DC, 24 Vdc
PPA36 - = Electrak PPA-DC, 36 Vdc

2. Dynamic load capacity
18B65 - = 3330 N
58B65 - = 6670 N

3. Stroke
04 = 4 inch (101,6 mm)
08 = 8 inch (203,2 mm)
12 = 12 inch (304,8 mm)
18 = 18 inch (457,2 mm)
24 = 24 inch (609,6 mm)
36 = 36 inch (914,4 mm)

4. Brake option
N - = no brake option

5. Feedback option
XX = no feedback option
LS = end of stroke limit switches
PO = potentiometer[1]
HS = encoder
HL = encoder + end of stroke limit switches

6. Bellows option
X = no bellows
C = bellows

[1] Not available with limit switches.

Ordering Keys

Electrak DC-actuators

Electrak 10

1	2	3	4	5
D12 -	20B5 -	04	M0	N

1. Input voltage
D12 - = 12 Vdc
D24 - = 24 Vdc
D36 - = 36 Vdc

2. Dynamic load capacity, screw type and maximum speed
05A5 - = 1100 N, acme, 54 mm/s
10A5 - = 2250 N, acme, 30 mm/s
20A5 - = 2250 N, acme, 15 mm/s
05B5 - = 2250 N, ball, 61 mm/s
10B5 - = 4500 N, ball, 30 mm/s
20B5 - = 4500 N, ball, 15 mm/s
21B5 - = 6800 N, ball, 15 mm/s

3. Stroke
04 = 4 inch (101,6 mm)
06 = 6 inch (152,4 mm)
08 = 8 inch (203,2 mm)
10 = 10 inch (254,0 mm)
12 = 12 inch (304,8 mm)
14 = 14 inch (355,6 mm)
16 = 16 inch (406,4 mm)
18 = 18 inch (457,2 mm)
20 = 20 inch (508,0 mm)
24 = 24 inch (609,6 mm)

4. Rear adapter hole position[1]
M0 = adaptor at 0° (standard position)
M1 = adaptor at 30°
M2 = adaptor at 60°
M3 = adaptor at 90°
M4 = adaptor at 120°
M5 = adaptor at 150°

5. Options
N = no option
NPO = potentiometer
NHW = manual override[2]

[1] Definition of rear adapter hole positions.

M0 - M5

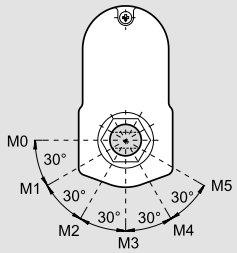

[2] Dimensions for manual override option.

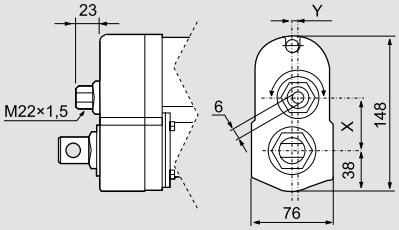

Model	X	Y
05A(B)5 -	49,6	0,0
10A(B)5 -	43,3	5,2
20(21)A(B)5 -	38,9	0,0

Ordering Keys

Electrak DC-actuators

Electrak LA14

1	2	3	4	5
DA12 -	10A65M	15	M0	N

1. Input voltage
DA12 - = 12 Vdc
DA24 - = 24 Vdc
DA36 - = 36 Vdc

2. Dynamic load capacity, screw type and maximum speed
05A65M = 1100 N, acme, 54 mm/s
10A65M = 2250 N, acme, 30 mm/s
20A65M = 2250 N, acme, 15 mm/s
05B65M = 2250 N, ball, 61 mm/s
10B65M = 4500 N, ball, 30 mm/s
20B65M = 4500 N, ball, 15 mm/s
21B65M = 6800 N, ball, 15 mm/s

3. Stroke
05 = 50 mm
10 = 100 mm
15 = 150 mm
20 = 200 mm
25 = 250 mm
30 = 300 mm
35 = 350 mm
40 = 400 mm
45 = 450 mm
50 = 500 mm
55 = 550 mm
60 = 600 mm

4. Rear / front adapter hole position[1]
M0 = both adaptors at 0° (standard position)
M1 = rear adaptor at 30°, front at 0°
M2 = rear adaptor at 60°, front at 0°
M3 = rear adaptor at 90°, front at 0°
M4 = rear adaptor at 120°, front at 0°
M5 = rear adaptor at 150°, front at 0°
MF = rear and front adaptor at 90°

5. Options
N = no option
NPO = potentiometer
NHW = manual override[2]

[1] Definition of adapter hole positions.

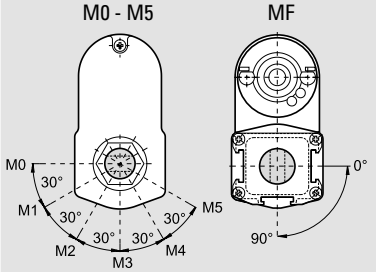

[2] Dimensions for manual override option.

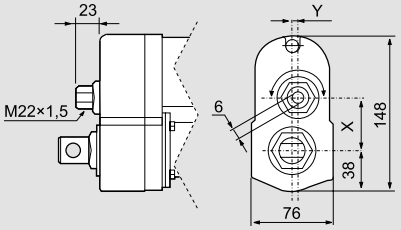

Model	X	Y
05A(B)65M	49,6	0,0
10A(B)65M	43,3	5,2
20(21)A(B)65M	38,9	0,0

Ordering Keys

Electrak AC-actuators

Electrak 5

1	2	3	4	5
A22 -	20B5 -	04	M0	BPO

1. Input voltage
A22 - = 1 × 230 Vac
A42 - = 3 × 400 Vac

2. Dynamic load capacity, screw type and maximum speed
05A5 - = 1100 N, acme, 54 mm/s[1]
10A5 - = 2250 N, acme, 30 mm/s
20A5 - = 2250 N, acme, 15 mm/s
05B5 - = 2250 N, ball, 61 mm/s
10B5 - = 4500 N, ball, 30 mm/s
20B5 - = 4500 N, ball, 15 mm/s
21B5 - = 6800 N, ball, 15 mm/s

3. Stroke
04 = 4 inch (101,6 mm)
06 = 6 inch (152,4 mm)
08 = 8 inch (203,2 mm)
10 = 10 inch (254,0 mm)
12 = 12 inch (304,8 mm)
14 = 14 inch (355,6 mm)
16 = 16 inch (406,4 mm)
18 = 18 inch (457,2 mm)
20 = 20 inch (508,0 mm)
24 = 24 inch (609,6 mm)

4. Rear adapter hole position[2]
M0 = adaptor at 0° (standard position)
M1 = adaptor at 30°
M2 = adaptor at 60°
M3 = adaptor at 90°
M4 = adaptor at 120°
M5 = adaptor at 150°

5. Options[3]
N = no option
B = anti coast brake[3]
NPO = potentiometer
NHW = manual override[4]
BPO = anti coast brake and potentiometer[3]
BHW = anti coast brake and manual override[3/4]

[1] 05A5 - not possible with 400 Vac input voltage.
[2] Definition of rear adapter hole positions.

M0 - M5

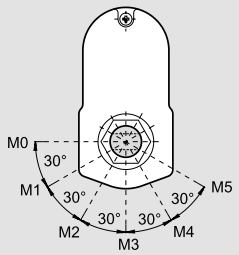

[3] Ball screw versions must always be ordered with an anti coast brake while acme versions can be ordered with or without an anti coast brake.
[4] Dimensions for manual override option.

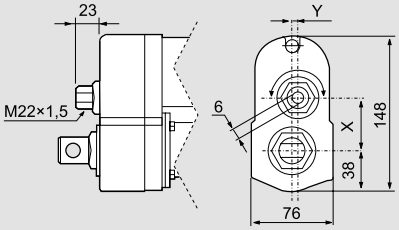

Model	X	Y
05A(B)5 -	49,6	0,0
10A(B)5 -	43,3	5,2
20(21)A(B)5 -	38,9	0,0

Ordering Keys

Electrak AC-actuators

Electrak LA24

1	2	3	4	5
AA22 -	20B65M	05	MF	BPO

1. Input voltage
AA22 - = 1 × 230 Vac
AA42 - = 3 × 400 Vac

2. Dynamic load capacity, screw type and maximum speed
05A65M = 1100 N, acme, 54 mm/s[1]
10A65M = 2250 N, acme, 30 mm/s
20A65M = 2250 N, acme, 15 mm/s
05B65M = 2250 N, ball, 61 mm/s
10B65M = 4500 N, ball, 30 mm/s
20B65M = 4500 N, ball, 15 mm/s
21B65M = 6800 N, ball, 15 mm/s

3. Stroke
05 = 50 mm
10 = 100 mm
15 = 150 mm
20 = 200 mm
25 = 250 mm
30 = 300 mm
35 = 350 mm
40 = 400 mm
45 = 450 mm
50 = 500 mm
55 = 550 mm
60 = 600 mm

4. Rear / front adapter hole position[2]
M0 = both adaptors at 0° (standard position)
M1 = rear adaptor at 30°, front at 0°
M2 = rear adaptor at 60°, front at 0°
M3 = rear adaptor at 90°, front at 0°
M4 = rear adaptor at 120°, front at 0°
M5 = rear adaptor at 150°, front at 0°
MF = rear and front adaptor at 90°

5. Options[3]
N = no option
B = anti coast brake[3]
NPO = potentiometer
NHW = manual override[4]
BPO = anti coast brake and potentiometer[3]
BHW = anti coast brake and manual override[3/4]

[1] 05A65M not possible with 400 Vac input voltage.
[2] Definition of adapter hole positions.

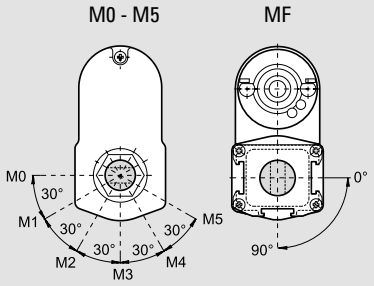

[3] Ball screw versions must always be ordered with an anti coast brake while acme versions can be ordered with or without an anti coast brake.
[4] Dimensions for manual override option.

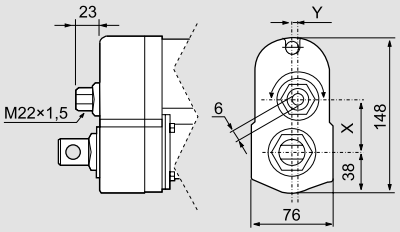

Model	X	Y
05A(B)65M	49,6	0,0
10A(B6)5M	43,3	5,2
20(21)A(B)65M	38,9	0,0

Ordering Keys

Electrak DC-actuators

Electrak Throttle

1	2	3	4	5	6	7
ET12-	084-	S	E	NP	1	S

1. Actuator type and supply voltage
ET12- = Electrak® Throttle, 12 VDC
ET24- = Electrak® Throttle, 24 VDC

2. Max. dynamic load and speed version
084- = 45 N (10 lbf), high speed*
174- = 130 N (30 lbf), standard speed

3. Harness orientation
S = parallel to adapter
R = rotated 90° in housing

S

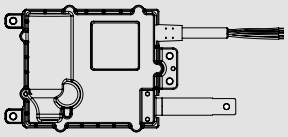

R

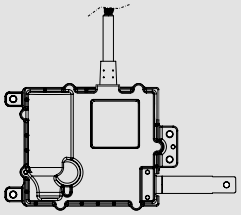

4. Temperature rating
S = standard: -40 (-40) to +85 (+185) °C (F)
E = high temperature: -40 (-40) to +125 (+257) °C (F)

5. Control option
NP = analog position feedback sensor
FN = end of stroke limit switches
FP = analog position feedback sensor and end of stroke limit switches
CN = CANBUS SAE J1939

6. Connection options
1 = flying leads
2 = Deutsch DTM04-6P connector

7. Adapter options
S = standard adapter orientation
M = adapter rotated 90°

S

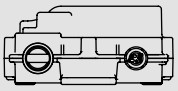

M

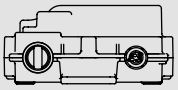

* Can only be ordered with high temperature rating (code E in position 4). Note that there is no thermal switch to protect the motor on the high temperature rated models.

Max Jac

1	2	3	4	5
MX12-	B8	M15	E	1

1. Actuator type and supply voltage
MX12- = Max Jac 12 VDC
MX24- = Max Jac 24 VDC

2. Max. dynamic load, screw type and max. speed
B8 = 800 N, ball screw, 55 mm/s
W1 = 500 N, worm screw, 35 mm/s

3. Stroke (S)
M05 = 50 mm
M10 = 100 mm
M15 = 150 mm
M20 = 200 mm
M25 = 250 mm*
M30 = 300 mm*

4. Position feedback option
P = analog signal (standard)
E = encoder signal

5. Cable and connectors
0 = 300 mm long flying leads
1 = 300 mm long cable and connector **
2 = 1600 mm long cable and connector **
** AMP Super seal series 1,5 connector

* Strokes possible for ball screw models only.

Ordering Keys

Lifting Columns

LC1600, LC2000, LC3000

1	2	3	4	5
LC2000	N	24	-400341	NX

1. Model
LC1600 = LC1600
LC2000 = LC2000
LC3000 = LC3000

2. Type
N = standard

3. Supply voltage
24 = 24 VDC

4. Stroke and retracted length
LC1600:
-200380 = 200 and 380 mm
-250430 = 250 and 430 mm
-300480 = 300 and 480 mm
-350580 = 350 and 581 mm
-400630 = 400 and 631 mm

LC2000:
-400341 = 400 and 341 mm
(1) see more on page 39

LC3000:
-400530 = 400 and 530 mm
(1) see more on page 41

5. Connection, electronic limit switches and encoder options
LC1600:
LX = Cable (L = 900 mm), flying leads, electronic limit switches
NE = Cable (L = 1900 mm), Molex connector, encoder feedback (2)
NX = Cable (L = 1900 mm), Molex connector, no encoder feedback (3)
LC2000, LC 3000:
NE = Cable (L = 1900 mm), Molex connector, encoder feedback (4)
NX = Cable (L = 1900 mm), Molex connector, no encoder feedback

(1) This is just an example, see section Ordering Stroke, Retracted Length and Weight on page 39 (LC2000) and page 41 (LC3000) for directions on how to calculate this number.
(2) Encoders are used when synchronizing multiple units. This option may only be used in conjunction with the DCG-254 control.
(3) This option may only be used in conjuction with the DCG-154 control.
(4) Encoders are used when syncronizing multiple units.

DMD

1	2	3	4
DMD24 -	10B5 -	16	PO

1. Model and input voltage
DMD12 - = DMD, 12 Vdc
DMD24 - = DMD, 24 Vdc
DMD36 - = DMD, 36 Vdc

2. Dynamic load capacity, screw type and maximum speed
05A5 - = 1100 N, acme, 54 mm/s
10A5 - = 2250 N, acme, 30 mm/s
20A5 - = 2250 N, acme, 15 mm/s
05B5 - = 2250 N, ball, 61 mm/s
10B5 - = 4500 N, ball, 30 mm/s
20B5 - = 4500 N, ball, 15 mm/s
21B5 - = 6800 N, ball, 15 mm/s

3. Stroke
04 = 4 inch (101,6 mm)
06 = 6 inch (152,4 mm)
08 = 8 inch (203,2 mm)
10 = 10 inch (254,0 mm)
12 = 12 inch (304,8 mm)
14 = 14 inch (355,6 mm)
16 = 16 inch (406,4 mm)
18 = 18 inch (457,2 mm)
20 = 20 inch (508,0 mm)
24 = 24 inch (609,6 mm)

4. Options[1]
PO = potentiometer

[1]Leave position blank for no option.

DMA

1	2	3	4
DMA22 -	20A5 -	06	

1. Model and input voltage
DMA22 - = DMA, 1 × 230 Vac
DMA42 - = DMA, 3 × 400 Vac

2. Dynamic load capacity, screw type and maximum speed
05A5 - = 1100 N, acme, 54 mm/s[1]
10A5 - = 2250 N, acme, 30 mm/s
20A5 - = 2250 N, acme, 15 mm/s
05B5 - = 2250 N, ball, 61 mm/s
10B5 - = 4500 N, ball, 30 mm/s
20B5 - = 4500 N, ball, 15 mm/s
21B5 - = 6800 N, ball, 15 mm/s

3. Stroke
04 = 4 inch (101,6 mm)
06 = 6 inch (152,4 mm)
08 = 8 inch (203,2 mm)
10 = 10 inch (254,0 mm)
12 = 12 inch (304,8 mm)
14 = 14 inch (355,6 mm)
16 = 16 inch (406,4 mm)
18 = 18 inch (457,2 mm)
20 = 20 inch (508,0 mm)
24 = 24 inch (609,6 mm)

4. Options[2]
PO = potentiometer

[1] 05A5 not possible with 400 Vac input voltage.
[2] Leave position blank for no option.

Ordering Keys

Rodless Actuators

LM80-H

1	2	3	4	5	6	7
DT24 -	B62M -	140	A	C	H	X

1. Model and input voltage
DT12 - = LM80, 12 Vdc
DT24 - = LM80, 24 Vdc

2. Load torque capacity and screw type
T68M - = 250 Nm, trapezoidal
B61M - = 400 Nm, ball
B62M - = 180 Nm, ball
B65M - = 750 Nm, ball

3. Stroke
050 = 500 mm
060 = 600 mm
070 = 700 mm
080 = 800 mm
090 = 900 mm
100 = 1000 mm
110 = 1100 mm
120 = 1200 mm
130 = 1300 mm
140 = 1400 mm
150 = 1500 mm

4. Motor position
A = 0° (standard)
B = 60°
C = 120°
D = 180°
F = 300°

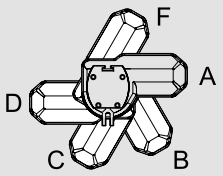

5. Motor enclosure
C = with enclosure (IP44)
U = no enclosure (IP33)

6. Mounting position
H = horizontal

7. Options
X = no option
H = manual override[1]

[1] Manual override dimensions.

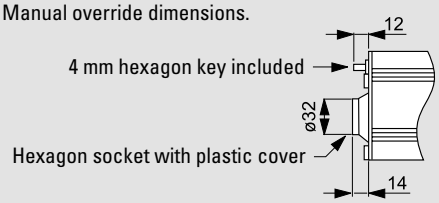

LM80-V

1	2	3	4	5	6	7
DT24 -	B62M -	140	A	C	V	X

1. Model and input voltage
DT12 - = LM80, 12 Vdc
DT24 - = LM80, 24 Vdc

2. Load torque capacity and screw type
T68M - = 250 Nm, trapezoidal
B61M - = 400 Nm, ball
B62M - = 180 Nm, ball
B65M - = 750 Nm, ball

3. Stroke
050 = 500 mm
060 = 600 mm
070 = 700 mm
080 = 800 mm
090 = 900 mm
100 = 1000 mm
110 = 1100 mm
120 = 1200 mm
130 = 1300 mm
140 = 1400 mm
150 = 1500 mm

4. Motor position
A = 0° (standard)
B = 60°
C = 120°
D = 180°
F = 300°

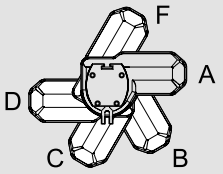

5. Motor enclosure
C = with enclosure (IP44)
U = no enclosure (IP33)

6. Mounting position and spline safety function
V = vertical with motor down, no spline safety function
F = vertical with motor down, with spline safety function

7. Options
X = no option
H = manual override (see LM80-H above for dimensions)

Ordering Keys

Rodless Actuators and DCG Actuator Controls

LM80-I

1	2	3	4	5	6	7
DT24 -	T68M -	090	G	C	V	H

1. Model and input voltage
DT24 - = LM80, 24 Vdc

2. Load torque capacity and screw type
T68M - = 250 Nm, trapezoidal
B61M - = 400 Nm, ball
B62M - = 180 Nm, ball
B65M - = 750 Nm, ball

3. Stroke
050 = 500 mm
060 = 600 mm
070 = 700 mm
080 = 800 mm
090 = 900 mm
100 = 1000 mm
110 = 1100 mm
120 = 1200 mm
130 = 1300 mm
140 = 1400 mm
150 = 1500 mm

4. Motor position
G = in line

5. Motor enclosure
C = with enclosure (IP44)

6. Mounting position and spline safety function
V = vertical with motor down, no spline safety function

7. Options
X = no option
H = manual override[1]
E = encoder
K = manual override + encoder

[1] Manual override dimensions.

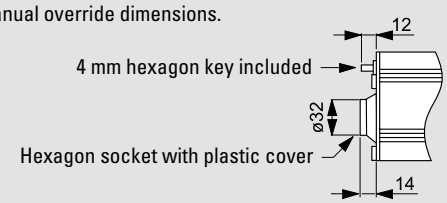

DCG Actuator Controls

1	2	3	4	5
DCG	24	-1	M	180

1. Type of control
DCG = actuator control type DCG

2. Output voltage
24 = 24 Vdc

3. Type of operation
-1 = operation of a single actuator
-2 = operation of two parallel synchronous actuators

4. Input voltage
M = 230 Vac
U = 115 Vac

5. Matching actuator
-0150 = single drive of LA1, E050 and Q050
-0154 = single drive of LC1600
-0160 = single drive of all LM80 for vertical operation
-0170 = single drive of all LM80 for horizontal operation, E150 without limit switches
-0180 = single drive of LC2000, LC3000
-0190 = single drive of LA10, LA14, PPA-DC and Movoact-DC
-0254 = parallel synchronous drive of LC1600 with encoder feedback
-0260 = parallel synchronous drive of LM80 inline versions with encoder feedback
-0280 = parallel synchronous drive of LC2000, LC3000 with encoder feedback

Ordering Keys

Non-driven Actuators

Electrak PPA-M

1	2	3	4
PPA00 -	01B65 -	24	N-XXX

1. Model
PPA00 - = Electrak PPA-M

2. Dynamic load capacity
01B65 - = 6670 N

3. Stroke
04 = 4 inch (101,6 mm)
06 = 6 inch (152,4 mm)
08 = 8 inch (203,2 mm)
12 = 12 inch (304,8 mm)
18 = 18 inch (457,2 mm)
24 = 24 inch (609,6 mm)
36 = 36 inch (914,4 mm)

4. Bellows option
N-XXX = no bellows
N-XXC = bellows

FA14

1	2	3	4	5
FA14 -	10A65M	35	M2	N

1. Model
FA14 - = Electrak FA14

2. Dynamic / static load capacity and screw type
05A65M = 1100 / 11350 N, acme
10A65M = 2250 / 11350 N, acme
20A65M = 2250 / 11350 N, acme
05B65M = 2250 / 18000 N, ball
10B65M = 4500 / 18000 N, ball
20B65M = 4500 / 18000 N, ball
21B65M = 6800 / 18000 N, ball

3. Stroke
05 = 50 mm
10 = 100 mm
15 = 150 mm
20 = 200 mm
25 = 250 mm
30 = 300 mm
35 = 350 mm
40 = 400 mm
45 = 450 mm
50 = 500 mm
55 = 550 mm
60 = 600 mm

4. Rear / front adapter hole position[1]
M0 = both adaptors at 0° (standard)
M1 = rear adaptor at 30°, front at 0°
M2 = rear adaptor at 60°, front at 0°
M3 = rear adaptor at 90°, front at 0°
M4 = rear adaptor at 120°, front at 0°
M5 = rear adaptor at 150°, front at 0°
MF = rear and front adaptor at 90°

5. Options
N = no option
HW = manual override[2]

[1] Definition of adapter hole positons.

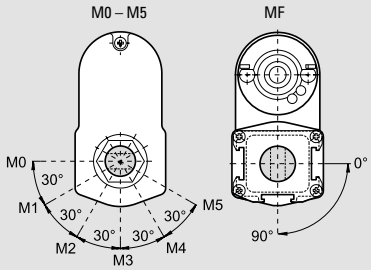

[2] Dimensions for manual override option.

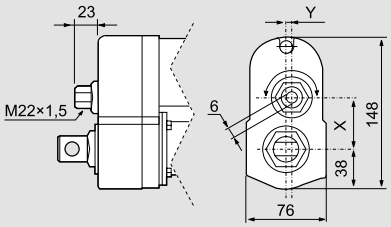

Model	X	Y
05A(B)65M	49,6	0,0
10A(B)65M	43,3	5,2
20(21)A(B)65M	38,9	0,0

Flanges for FA14

Description	Part Number	Description	Part Number
Nema 23	D390887	**IL348**	D389819
Nema 34	D389984	**Akm3x-AN**	D390930
IEC 63 B14	D390820	**Akm4x-AN**	D389939
Servo 80, S80	D390822		

Glossary

A – C

Acme Screw
Acme screws are self locking and will not backdrive. They also withstand vibration and shock better than ball or worm screws and are used for applications with these characteristics. Also see “lead screw”.

Actuator Housing
The actuator housing provides environmental protection for the internal components and may also be a structural member of the actuator.

Adapters
The front and rear adapters are the connection points for mounting most Thomson actuators. The front adapter is usually a cross hole but optionally may be a tapped hole, threaded rod, or universal rod end. The rear adapter may be cast into the actuator housing or held in place with a nut.

Adjustable End of Stroke Limit Switches
The adjustable end of stroke limit switches may be moved to positions inside the full stroke of the actuator and will shut off the actuator when it reaches the limit switch. Also see “end of stroke limit switches”.

Anti Coast Brake/Electrical Brake
Depending on the load, AC ball screw actuators may coast to a stop when power is removed. This overrun is eliminated by an anti coast brake or an electrical brake. The anti coast brake (pawl type) will allow up to one revolution of the motor after power is removed. They are used on the Electrak 5 and PPA-AC with anti coast brake. An electrical brake (electrically released) operates much faster after power is removed and allow less coast than the pawl type. Electrak 205 and the PPA-AC with electrical brake use this type of brake. Also see “brake”.

Anti Rotation Mechanism
A feature available on some actuators that resolves the restraining torque within the actuator. The extension tube will not rotate on actuators with this feature.

Auto Reset Thermal Switch
An auto reset thermal will switch off the motor if it becomes to warm which means that the motor has exceeded its maximum allowed duty cycle. When the motor has cooled of the switch will close again automatically and the motor will start to run if power still is being applied to it. Also see “duty cycle”.

Ball Screw
Ball screws are highly efficient and are used for high loads and speeds. Also see “lead screw”.

Brake
Actuators using a acme or worm screw are inherently self-locking while ball screw driven actuators are not. To prevent ball screw actuators from backdriving they incorporate an anti backdriving brake (holding brake). Ball screw actuators with an AC motor can also be equipped with an anti coast brake. Also see “anti coast brake/electrical brake” and “holding brake”.

Capacitor
The AC actuators use permanent split capacitor motors and require the use of a start/run capacitor in the control circuit to operate. The controls for the AC actuators have the capacitor included in the control. For customer supplied controls, a separate capacitor is required and the part number is included on the actuator product page.

Certificates
CE certification and UL listing are the two main third party approvals available for actuators. Most of the AC actuators are UL listed as standard and UL has no standard for DC actuators under 48 Vdc. All actuators sold in the EU are CE certified while some actuators sold outside of the EU may not be. If you order your actuator outside of the EU and need a CE certification, contact the factory to verify availability and be sure to include the request on your order.

Controls
Controls can be external to the actuator and provide the actuator with the correct voltage, have either membrane or pendant operators and some have position indicators.

Cover Tube
The cover tube provides protection for the lead screw and provides protection and support for the extension tube. For the Electrak 100 and PPA and as an option on the Electrak 205 actuators, the cover tube also provides the rear mounting connection.

Customization
Even the most versatile actuator may not always suit all applications. But whatever your need is, our engineers are ready to help you to customize the actuators according to your requirements. We build more exclusive actuators than anyone else and have decades of experience of producing actuators to meet special needs.

Glossary

D – G

Duty Cycle

$$\text{Duty cycle} = \frac{\text{on time}}{(\text{on time} + \text{off time})}$$

Example: 15 seconds on, 45 seconds off

$$\frac{15\ \text{s}}{(15\ \text{s} + 45\ \text{s})} = 25\%\ \text{duty cycle}$$

The duty cycle is a function of the maximum rated load and the ambient temperature. Ambient temperatures above the stated will affect the duty cycle negatively while lower temperatures and/or lower load will affect it positively. Review the following duty cycle versus load charts when higher duty cycles are needed for Electrak 1, Electrak 10 or DMD actuators.

Electrak 1, Electrak 1SP

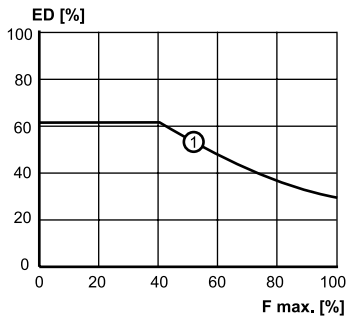

ED: duty cycle in percent at 25° C
F max: percent of maximum rated load
1: all Electrak 1 and Electral 1SP models

Electrak 10, DMD

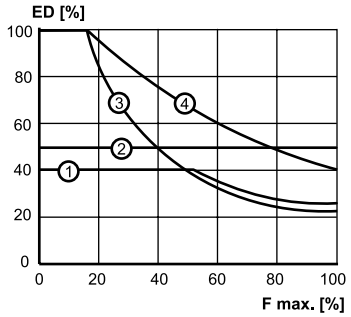

ED: duty cycle in percent at 25° C
F max: percent of maximum rated load
1: D • • -10A5 (acme screw)
2: D • • -20A5 (acme screw)
3: D • • -05B5 (ball screw)
4: D • • -20B5 (ball screw)

Dynamic Load

The dynamic load rating is how much load the actuator will move when power is applied. Also see “load rating”.

Dynamic Braking

Dynamic braking is a feature which short circuits the motor windings at power off resulting in a shorter coasting distance before the actuator comes to a complete stop. Dynamic braking can be accomplished on other dc actuators by wiring the control to short the motor leads when power is removed.

Electronic Limit Switches (ELS)

ELS stands for Electronic Limit Switches and it is a current sensing function used in some actuator control models. The ELS senses the current and if the current exceeds a pre-set level the control cuts the power to the motor. This function can be used to detect and stop at the ends of the actuator stroke or to stop the actuator if it runs into an obstacle.

Electronic Load Monitoring (ELM)

A built-in microprocessor inside the actuators continuously monitors the performance of the actuator. The microprocessor will stop the movement at the end of stroke, in case of mid stroke stall, at overload conditions or if the duty cycle is too high. It also eliminates the need of a clutch and provides dynamic braking.

Encoder Feedback

Encoders provide a digital output signal that can be used to determine the position of the extension tube. An encoder equipped actuator must return to a “home” position if power is removed and restored in order to reset its starting point. Also see “potentiometer feedback”.

End of Stroke Limit Switches

End of stroke limit switches are switches that are incorporated in some actuator models, either as standard or as an option, that will shut off power when the end of stroke is achieved. Also see “fixed end of stroke limit switches” and “adjustable end of stroke limit switches”.

End Play (Backlash)

The stack up of tolerances within the lead screw assembly and gearing allowing some linear movement of the extension tube without rotating the motor. Typical end play or backlash varies by model. The range is 0,3 to 2,0 mm.

Extension Tube

The extension tube slides in and out of the actuator and is connected via the front adaptor to the load being moved or positioned.

Fixed End of Stroke Limit Switches

The fixed end of stroke limit switches allow the full stroke of the actuator to be used and will shut off power when the end of stroke is achieved. Also see “end of stroke limit switches”.

Glossary

H – Life

Holding Brake
The Electrak 1, 2, 050 and 150 incorporate an acme screw which is inherently self-locking while Electrak 5, 10, 100 and 205 have a ball screw drive incorporating an anti backdriving brake (holding brake) that engages when the actuator has come to a complete stop. Also see “brake”.

Input Voltage
The nominal voltage required to operate the actuator. All actuators will accept at least a ± 10 % variation of the nominal voltage but a change in the voltage will result in a change of the speed of dc actuators. Controls are available that accept 115 or 230 Vac input and provide 24 Vdc output to operate 24 Vdc actuators.

Installation Instructions
Each actuator has an installation manual to answer typical questions about mounting and wiring the actuators.

Lead Screw
Actuators use four different types of lead screws depending on the configuration and load requirements of the actuator. Ball screws are highly efficient and are used for high loads and speeds. Acme, worm and trapezoidal screws are self locking and will not backdrive. Acme and trapezoidal screws withstand vibration and shock better than the other and are used for applications with these characteristics.

Lifetime Expectancy
Life is a function of load, stroke length and how often the overload clutch is operated. The following life versus load charts will provide a life estimate for your particular application. Contact customer service for more information or for information on other actuator models.

Electrak 1, Electrak 1SP

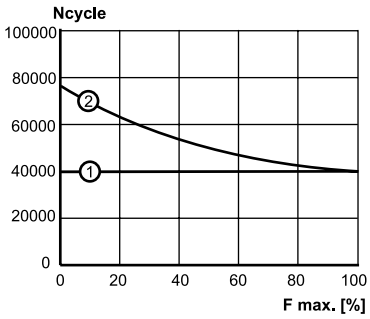

Ncycle: life in number of cycles (one cycle = extend and retract)
F max: percent of maximum rated load
1: Electrak 1 when using the internal limit switches for end of stroke
2: both models when using external limit switches for end of stroke

Electrak 10, DMD - Acme Screw Models

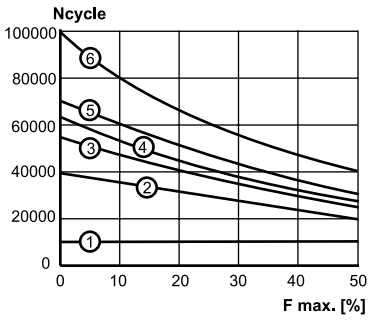

Ncycle: life in number of cycles (one cycle = extend and retract)
F max: percent of maximum rated load
1: all models using the clutch at end of stroke
2: D • • -20A5, 12 inch stroke
3: D • • -20A5, 8 inch stroke
4: D • • -10A5, 12 inch stroke
5: D • • -10A5, 8 inch stroke and D • • -20A5, 4 inch stroke
6: D • • -10A5, 4 inch stroke

Contact customer service if you need life estimates for loads above 1125 N or stroke lengths above 12 inch.

Electrak 10, DMD - Ball Screw Models

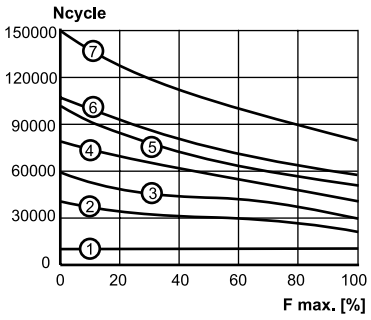

Ncycle: life in number of cycles (one cycle = extend and retract)
F max: percent of maximum rated load
1: all models using the clutch at end of stroke
2: D • • -10B5 and D • • -20B5, 12 inch stroke
3: D • • -10B5 and D • • -20B5, 8 inch stroke
4: D • • -05B5, 12 inch stroke
5: D • • -10B5 and D • • -20B5, 4 inch stroke
6: D • • -05B5, 8 inch stroke
7: D • • -05B5, 4 inch stroke

Contact customer service if you need life estimates for loads above 4500 N or stroke lengths above 12 inch.

Electrak 5, DMA - Ball Screw Models

Glossary

Lift – O

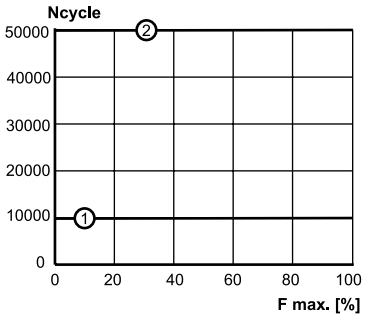

Ncycle: life in number of cycles (one cycle = extend and retract)
F max: percent of maximum rated load
1: all models using the clutch at end of stroke
2: all models using the anti-coast brake at end of stroke only

The above chart is only valid for ball screw models with rated load up to 4500 N and stroke lengths up to 12 inch. Contact customer service if you need life estimates for acme screw models or for higher loads or longer stroke lengths.

Lifting Columns
Lifting columns provide a stable base for adjusting the height of tables or platforms. The column provides both the lifting force and the ability to resolve high moment forces from off axis loads.

Linear Actuators
Actuators providing a linear thrust via an extension tube to lift, lower, push, pull or position a load.

Load Rating
The load rating is the minimum amount of force the actuator will provide during its lifetime. The load rating of all rod style actuators is the same for both compression and tension loads. Also see “dynamic load”, “static load” and “tension and compression load”.

Manual Override (Hand Wind)
Allows manual operation of the actuator in both directions in case of a power failure. The actuator accepts a standard hexagon key to rotate the motor in either direction. Optional on some models.

Maximum On Time
The maximum amount of time an actuator may operate without stopping to “cool off”. For high load and long stroke actuators this may be one extend and retract cycle. The actuator should not exceed 25% duty cycle at full rated load. If no maximum on time is stated then the maximum on time are equal to one full cycle at the maximum dynamic load for the actuator in question.

Mounting
Electrak actuators are quickly and easily mounted by slipping pins through the holes on each end of the unit and into brackets on the machine frame and the load. Electrak 100 units must be mounted by the cover tube and a swivel rod end. PPA actuators are mounted by the rear trunnions on the cover tube and the clevis on the extension tube. The Electrak 205 can be mounted by either the rear clevis or by a tube mount. 12,7 mm diameter solid pins (6,35 mm solid pins for Electrak 1 and 050) provide maximum holding strength and a retaining or cotter pin on each end will prevent the solid pin from falling out of its mounting bracket. Roll or spring type mounting pins should be avoided. The mounting pins must be parallel to each other as shown below (Fig. a). Pins which are not parallel may cause the actuator to bind. The load should act along the axis of the actuator since off center loads may cause binding (Fig. b).

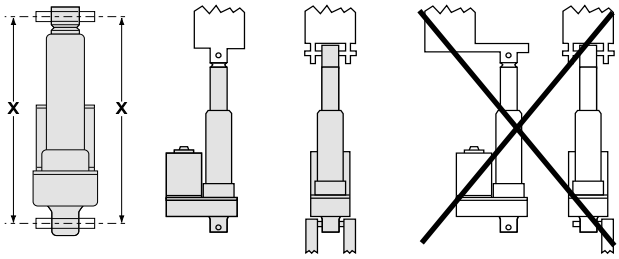

Fig. a Fig. b

Non-driven Actuators
Actuators supplied without a motor and driven manually or by a customer supplied motor.

Operating and Storage Temperature
The operating temperature is the range in which the actuator may be safely operated. For the high end of the range, the duty cycle will be lower than 25 %. All actuators can be stored or transported at the same temperature as the operating temperature. Contact customer support if the operating temperature will be exceeded during storage or transportation.

Output Voltage
Output voltage is the voltage from the control to run the actuator. The controls for dc actuators have 24 Vdc output. The controls for ac actuators have either 115 or 230 Vac output.

Overload Clutch
Electrak 050, 2, 5, 10, 100, 205 and PPA series linear actuators are protected by a load limiting mechanical clutch which prevents the motor from stalling at either end of the actuator stroke. It will also slip when the factory-set load limit is exceeded. The clutch is a ball detent design, assuring a consistent slip point and long life.

Glossary

P – Sp

Potentiometer Feedback

Potentiometers provide an analog output signal that can be used to determine the position of the extension tube. A potentiometer will "remember" its position if power is removed and restored. All potentiometers are set to a minimum value on full retract except for the EU versions of Electrak 5 and Electrak 10 where the minimum value are set on full extend. Also see "encoder feedback.

Protection Class

The protection class refers to the environmental rating of the enclosure. The first digit applies to airborne contaminants and the second digit to water/moisture.

IP33: protected against the penetration of solid objects with a diameter greater than 12 mm and against direct sprays of water up to 60 degrees from vertical.

IP44: protected against the penetration of solid objects with a diameter greater than 1 mm and against water sprayed from any direction.

IP45: protected against the penetration of solid objects with a diameter greater than 1 mm and low pressure water jets from any direction.

IP51: protected from dust and vertical dripping water/ condensation.

IP52: protected from dust and dripping water/condensation falling at an angle up to 15 degrees from vertical.

IP56: protected from dust and high pressure water jets from any direction.

IP65: dust tight and protected against low pressure water jets from any direction.

IP66: dust tight and protected against high pressure water jets from any direction.

IP67: dust tight and protected against the effect of immersion in water between 150 mm (5.9 inch) and 1 meter (39.4 inch).

Pulse Width Modulation (PWM)

Pulse width modulation control works by switching the power supplied to the motor on and off very rapidly. The DC voltage is converted to a square-wave signal, alternating between fully on and zero, giving the motor a series of power "kicks". If the switching frequency is high enough, the motor runs at a steady speed due to its fly-wheel momentum. By adjusting the duty cycle of the signal (modulating the width of the pulse, hence the 'PWM'), the time fraction it is "on", the average power can be varied, and hence the motor speed. All DC actuators can be speed controlled by PWM within certain limits without any adjustments.

Note: Actuators with built-in electronics and CE filters will be affected negativly by the PWM modulation and should not be used together.

Restraining Torque

The torque which is developed between the clevis on the extension tube and rear mount(clevis or trunnion) when the unit extends or retracts and ratchets the clutch (Fig. c).

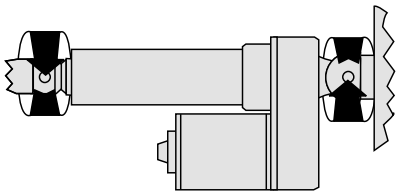

Fig. c

Rodless Actuators

Rodless actuators provide support for the load as well as thrust. The load is supported and moved by a carriage on the actuator rather than pushed or pulled by an extension rod. Rodless actuators are ideal for applications requiring long strokes (up to 1500 mm), high speeds (up to 110 mm/s), movement of the load within the shortest envelope possible or the load supported by the actuator.

RoHS Compliance

All actuators, controls and accessories sold in the EU are RoHS compliant unless otherwise stated, while products sold outside of the EU may not be. If you order an actuator outside of the EU and need it to be RoHS compliant, contact the factory to verify availability and be sure to include the request on your order.

Rotary Actuators

Actuators providing a rotary output to position a load, turn a winch, or rotate a gear or sprocket.

Service and Maintenance

Actuators are generally maintenance free. The Electrak 2, 5, 10, 100,and 205 have repair kits available from your local distributor or OEM.

Sizing and Selection

The Thomson web site www.thomsonlinear.com includes an online tool that can be used to walk through the decision process for picking the best actuator and to get the ordering data for your choice.

Speed

DC actuators have a direct load/speed relationship. As the load increases, the speed of the dc actuators decreases. There are curves on each product page to show the speed from no load to full rated load. AC actuators have very little speed fluctuations based on load but there are load/speed curves on all the ac actuator product pages.

Glossary

Sp – W

Spline Safety Function
An optional safety function on the rodless actuator (LM80) that will stop downward motion in case the carriage (the moving member) collides with an obstacle. The motor will keep running but the carriage will stand still and not pull down on the obstacle. When reversing the motor rotation the carriage will automatically start to move upwards again.

Static Load
The static load rating is how much load the actuator will hold with power off. The static load rating is normally twice the dynamic load rating. Also see “load rating”. If nothing else is stated the static load rating is for the actuator extension tube being fully retracted. The static load rating will decrease as the tube extends.

Synchronous Operation
Motor speed cannot be controlled with enough precision to ensure that the actuators will remain synchronized and a binding effect could take place. Non-driven actuators may be mechanically linked and thereby synchronized. Actuators equipped with an encoder can also be synchronized using controls designed for synchronous operation.

Tension and Compression Load
A tension load tries to stretch the actuator and a compression load tries to compress the actuator (Fig. d). Most actuators can manage the same tension and compression load. Also see “load rating”.

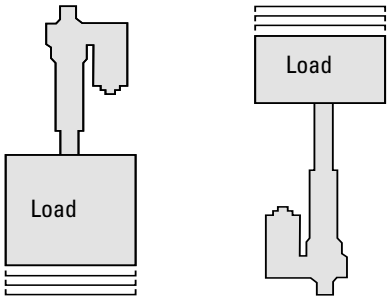

Fig. d

Trapezoidal Screw
Screw type with similar characteristics as an acme screw. This type of screw is used in LC1600 and LM80. Also see “acme screw” and “lead screw”.

Vent Tube
The Electrak 050 and 150 have a breather tube in the wiring harness to allow the actuator to operate without creating a vacuum and drawing water through the seals on the cover tube.

Voltage Drop
Long leads/cables between the power source and the actuator will result in a voltage drop for DC units. This voltage drop can be avoided by sizing the leads in accordance with the following lead
cross section selection table. The table is based on an ambient temperature of 30 °C or less. A higher ambient temperature may result in the need for a greater lead cross section.

Lead Cross Section Selection Table [mm²]

Current draw [A]	Cable length [m]	Actuator input voltage [Vdc}		
		12	24	36
0 - 10	0 - 3	1,5	1,5	1,5
	3 - 6	2,5	1,5	1,5
	6 - 10	4	1,5	1,5
10 - 15	0 - 3	1,5	2,5	1,5
	3 - 6	2,5	2,5	1,5
	6 - 10	4	2,5	1,5
15 - 20	0 - 3	2,5	-	-
	3 - 6	4	-	-
	6 - 10	6	-	-
20 - 28	0 - 3	4	-	-
	3 - 6	6	-	-
	6 - 10	10	-	-
28 - 35	0 - 3	6	-	-
	3 - 6	6	-	-
	6 - 10	10	-	-

Worm Screw
Worm screws are self locking and will not backdrive. This type of screw is used in Electrak 050, Throttle and Max Jac. Also see “lead screw”.

EUROPE

United Kingdom
Thomson
Phone: +44 (0) 1271 334 500
Fax: +44 (0) 1271 334 501
E-mail: sales.uk@thomsonlinear.com

Germany
Thomson
Nürtinger Straße 70
72649 Wolfschlugen
Phone: +49 (0) 7022 504 0
Fax: +49 (0) 7022 504 405
E-mail: sales.germany@thomsonlinear.com

France
Thomson
Phone: +33 (0) 243 50 03 30
Fax: +33 (0) 243 50 03 39
E-mail: sales.france@thomsonlinear.com

Italy
Thomson
Largo Brughetti
20030 Bovisio Masciago
Phone: +39 0362 594260
Fax: +39 0362 594263
E-mail: info@thomsonlinear.it

Spain
Thomson
Rbla Badal, 29-31 7th, 1st
08014 Barcelona
Phone: +34 (0) 9329 80278
Fax: + 34 (0) 9329 80278
E-mail: sales.esm@thomsonlinear.com

Sweden
Thomson
Estridsväg 10
29109 Kristianstad
Phone: +46 (0) 44 24 67 00
Fax: +46 (0) 44 24 40 85
E-mail: sales.scandinavia@thomsonlinear.com

SOUTH AMERICA

Thomson
Sao Paulo, SP Brazil
Phone: +55 11 3879-6600
Fax: +55 11 3879 6656
E-mail: sales.brazil@thomsonlinear.com

USA, CANADA and MEXICO

Thomson
203A West Rock Road
Radford, VA 24141, USA
Phone: 1-540-633-3549
Fax: 1-540-633-0294
E-mail: thomson@thomsonlinear.com
Literature: literature.thomsonlinear.com

ASIA

Asia Pacific
Thomson
750, Oasis, Chai Chee Road,
#03-20, Technopark @ Chai Chee,
Singapore 469000
E-mail: sales.apac@thomsonlinear.com

China
Thomson
Rm 2205, Scitech Tower
22 Jianguomen Wai Street
Beijing 100004
Phone: +86 400 6661 802
Fax: +86 10 6515 0263
E-mail: sales.china@thomsonlinear.com

India
Thomson
1001, Sigma Building
Hiranandani Business Park
Powai , Mumbai – 400076
Phone: +91 22 422 70 300
Fax: +91 22 422 70 338
E-mail: sales.india@thomsonlinear.com

Japan
Thomson
Minami-Kaneden 2-12-23, Suita
Osaka 564-0044 Japan
Phone: +81-6-6386-8001
Fax: +81-6-6386-5022
E-mail: csinfo_dicgj@danaher.co.jp

Korea
Thomson
F12 Ilsong Bldg, 157-37
Samsung-dong, Kangnam-gu,
Seoul, Korea (135-090)
Phone: +82 2 6917 5049
Fax: +82 2 6917 5007
E-mail: sales.korea@thomsonlinear.com

www.thomsonlinear.com

Linear_Actuators_CTUK-0005-02B | 20140526 SK
Errors and technical alterations reserved. It is the responsibility of the product user to determine the suitability of this product for a specific application. All trademarks property of their respective owners. © Thomson Industries, Inc. 2014

THOMSON®
Linear Motion. **Optimized.**